Argonne NATIONAL LABORATORY

... for a brighter future

TRANSIMS Training Course at TRACC

Transportation Research and Analysis Computing Center

Part 10

Trip Table Conversion

Dr.-Ing. Hubert Ley

Transportation Research and Analysis Computing Center

Last Updated: April 21, 2008

U.S. Department of Energy

UChicago Argonne LLC

A U.S. Department of Energy laboratory managed by UChicago Argonne, LLC

Contents

Introduction

- TRANSIMS has been designed as an activity-based simulation tools based on census population data and activity surveys for the area being modeled
  - TRANSIMS depends heavily on the availability and quality of survey data
  - Surveys are expensive to obtain and need frequent updates
  - The complexity of modeling increases significantly by building a synthetic population and creating suitable activity patterns for the entire population
- Therefore, TRANSIMS can also be operated based on available trips and trip distribution data available from metropolitan planning organizations
  - Trip data is the basis for typical MPO planning purposes
  - Starting with existing data makes it much easier to create a metropolitan TRANSIMS model from scratch
  - Populations and activities can be added in the future based on the need for modeling specific scenarios
  - Trip data is typically based on traffic analysis zones with centroids being connected to the road network to load traffic demand appropriately

The Complete TRANSIMS Model

- Input Data for Modules
  - Transportation Network
    - *Streets, Intersections, Signals*
    - *Transit Routes and Schedules*
    - *Land Use Data, Zoning Information*
  - Transit Lines and Schedules
  - *Census Data for Population**
  - *Household Activity Surveys**
  - Itinerant Travelers and Trips
  - Vehicle Characteristics and Prototypes

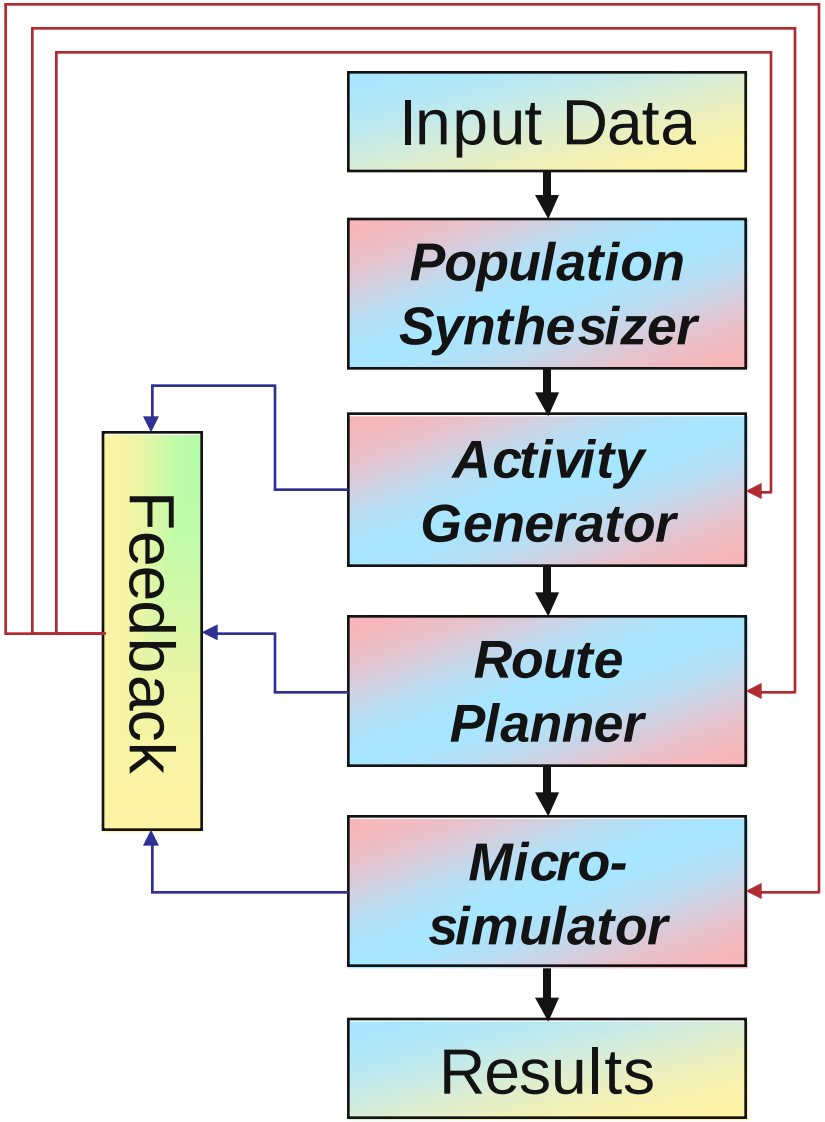

Generalized TRANSIMS Flow Chart

* Trip-based models do not need this data

Simplified Trip-Based TRANSIMS Models

- *Create a Road Network*
- *Create a Transit Network*
- *Obtain Transit Schedules*

- Methodology #2
  - Obtain Trip Tables
  - Obtain Diurnal Distributions
  - Run Trip Converter
- Create Travel Plans from **Trips** using the Router
- Test the Travel Plans in the Microsimulator
- Iterate Between Router and Microsimulator

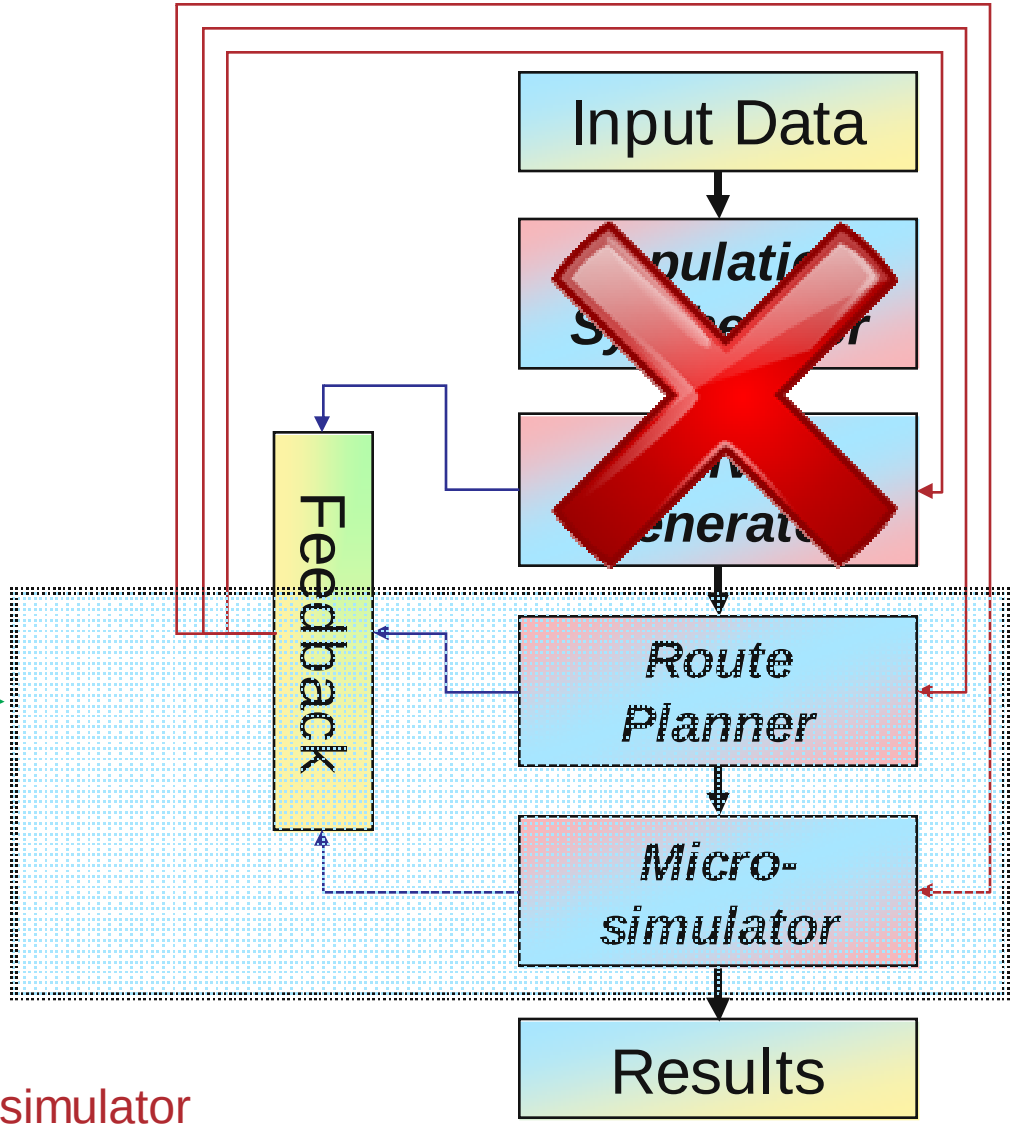

The TRANSIMS Network and Trips

Primary Challenges:

- How can trips be undertaken without having ever built an actual population?
- Where do trips start and end? How do traffic analysis zones and activity locations correlate?
- How is aggregate trip data extrapolated for use of a synthetic population?
- What format does trip data come in typically and how is it converted?

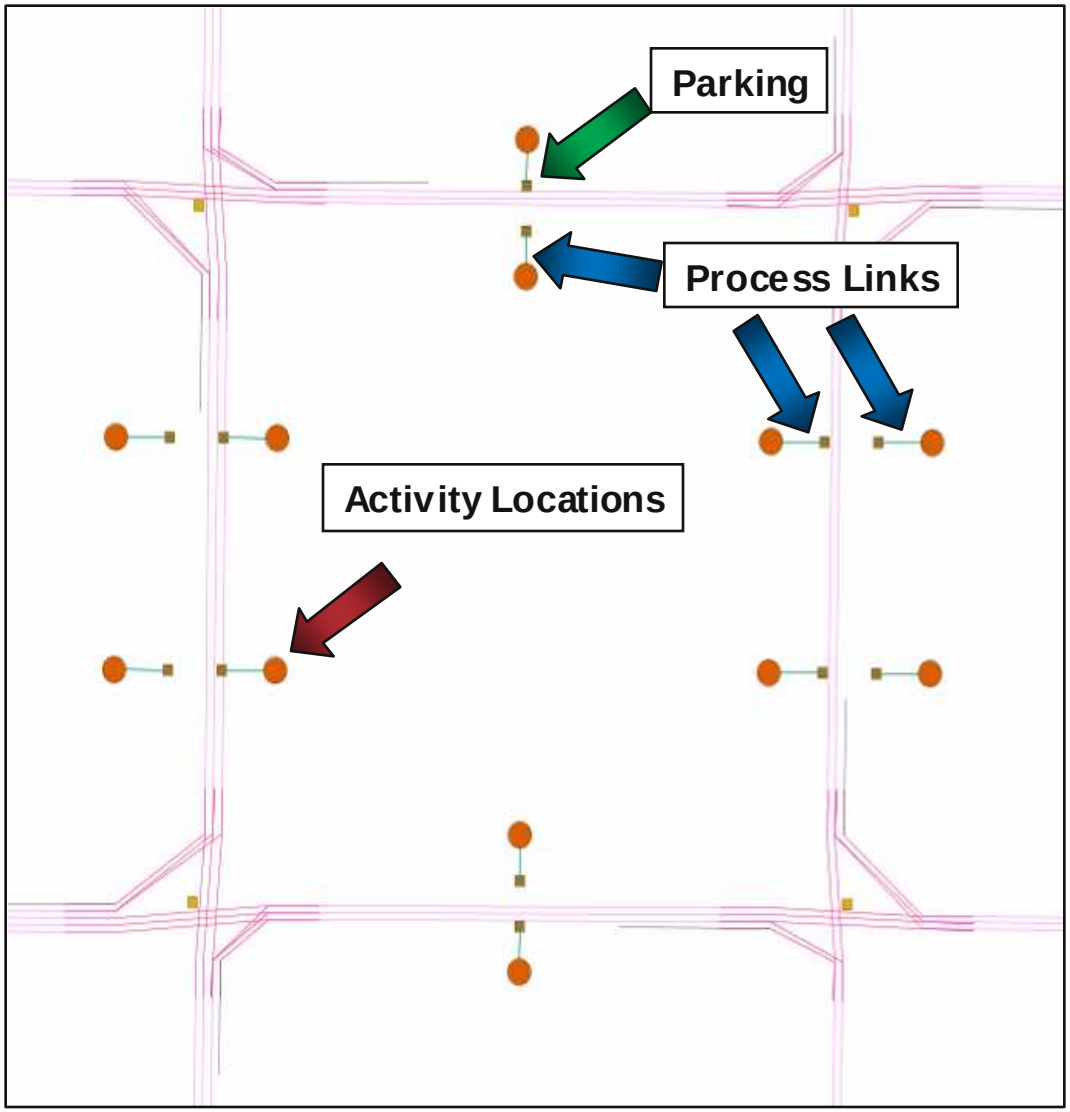

Typical Trip Data

From	To	# of Trips
1	1	18
1	2	232
1	3	365
2	1	240
2	2	23
2	3	278

- Typical trip data comes in form of tables describing how many trips are being taken from any traffic analysis zone to any other traffic analysis zone for a given time interval (typically a day, see sample data on the right)
- Trip data is typically aggregated for the whole day
- Zones are at a relatively low resolution compared to TRANSIMS street networks
- For Chicago, there are 1950 traffic analysis zones
- Trip tables are often available for specific subsets such as
  - HBW
  - HBO
  - Transit …

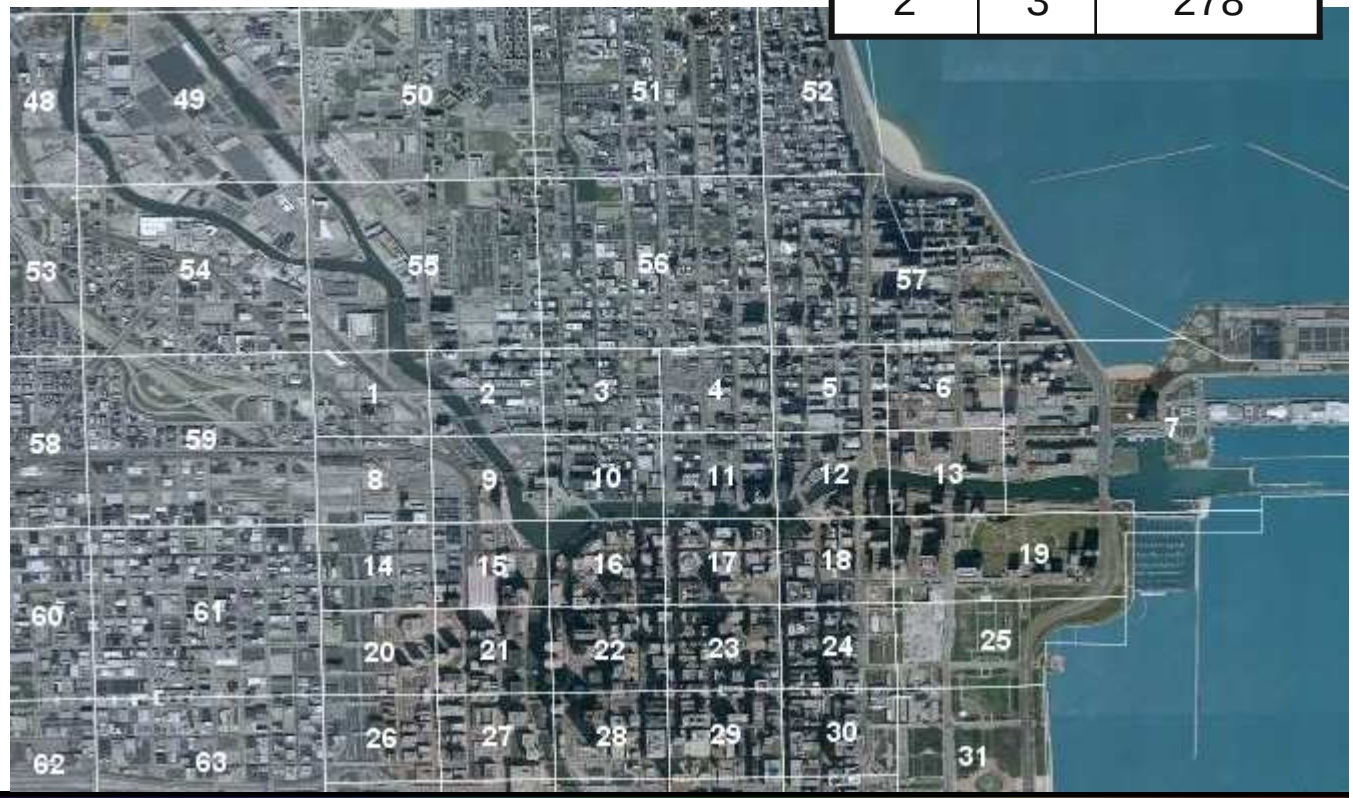

Diurnal Distributions

- Diurnal distributions describe the total number of trips as a function of daytime
- Diurnal distributions vary widely from area to area and from trip purpose to trip purpose
- They represent another form of aggregate data and can be used in combination with the corresponding trip tables to reconstruct detailed trips from aggregate data
- Smoothing can be used to make diurnal distributions more suitable for trip conversion (the SmoothData tool)

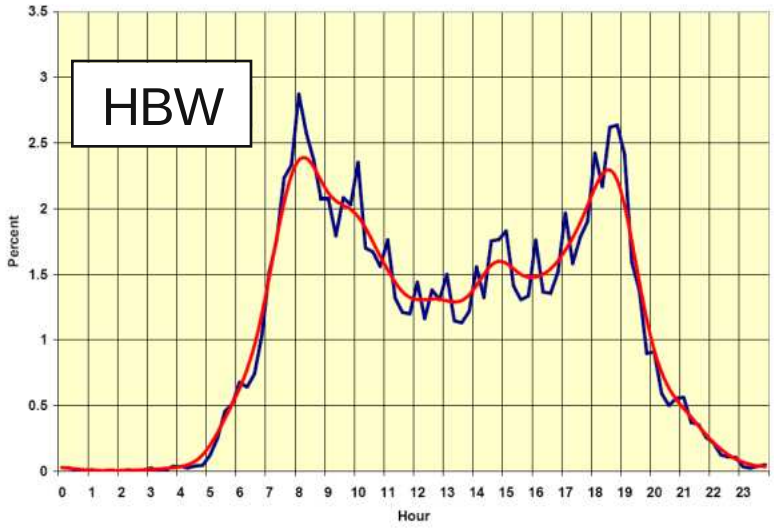

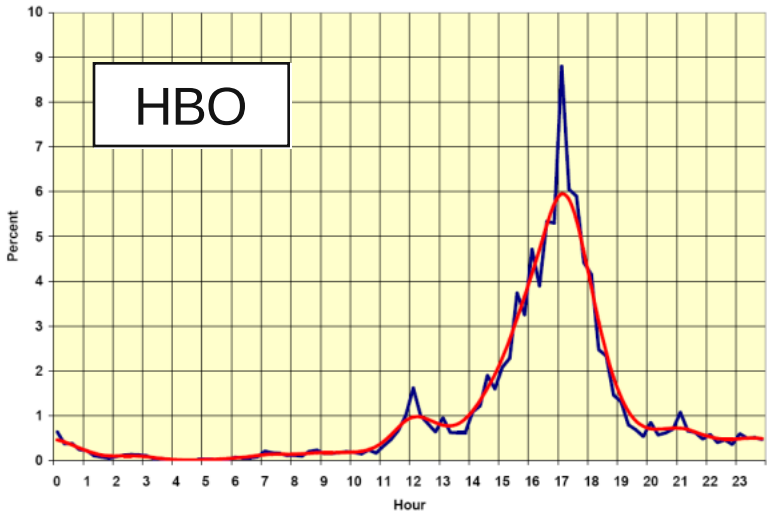

Typical Trip Data and the ConvertTrips Tool

- Transims provides a tool ConvertTrips to create approximated specific trips for an entire synthetic population based on available trip tables
  - Without a synthetic population based on Census data, ConvertTrip creates an artificial person and vehicle for each specific trip to place it onto the network
  - Without basing the trips on the activities of a specific person, otherwise related trips appear to be undertaken by different individuals
- Trips start and end points are extrapolated from aggregate zoning locations to specific TRANSIMS activity locations
  - A real work tour is being represented by some individual leaving at some time in the morning from somewhere close by and retuning as a different individual at some time in the afternoon to yet another location close by
- Diurnal distributions must match the corresponding trip table to lead to defensible results

Resolution of Zoning Data versus Road Network

Using Trip Tables in TRANSIMS

- ConvertTrips generates large trip tables with one record for each specific trip undertaken in the simulation area
- The records specify details such as
  - Start and estimated end time for each trip
  - The exact activity locations for both start and destination
  - The mode of travel
- It also creates one new synthetic person and one new vehicle for each trip
- These records can be used by the TRANSIMS router to create exact travel plans for subsequent use in the microsimulator
- The extrapolation of aggregated trip and diurnal distribution data leads to large trip files, e.g. 1.4GB for 25,500,000 daily automobile trips in the Chicago Metropolitan Area

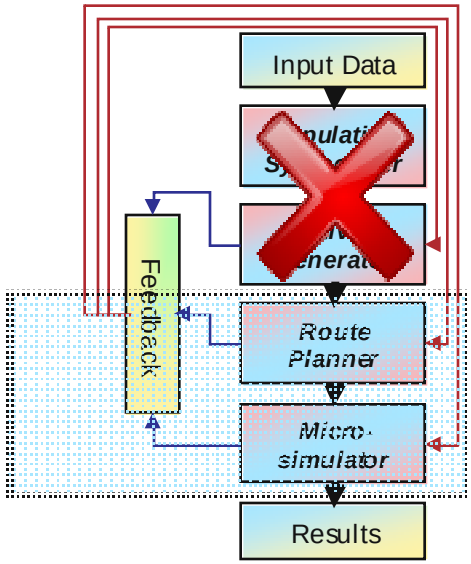

Combining Multiple Data Sets

- ConvertTrips can operate on a large number of data sets
- Each data set can have its own diurnal distribution
- Weight can be applied for both choosing the destinations or origins of trips
- Diurnal distributions can be complex, and an internal scripting language can be used to assign specific diurnal distributions to each traffic analysis zone
- For Chicago, there are 10 data sets for HBW, HBO, NHB, Airport Travel, and several classes of trucks, plus 3 transit and 3 park and ride data tables
- All these can be converted in a single run of ConvertTrips
- An example control file is shown on the next slide to illustrate the control keys

Sample ConvertTrips Control File

```
#
DEFAULT_FILE_FORMAT TAB_DELIMITED
#
# TRANSIMS network files to be used as input for this run
#
NET_DIRECTORY ../../network/production
NET_ACTIVITY_LOCATION_TABLE FullArea_Activity_Location
NET_PROCESS_LINK_TABLE FullArea_Process_Link
#
# New TRANSIMS files to be created by this run
#
NEW_TRIP_FILE ../../activity/Trip
NEW_POPULATION_FILE ../../household/Population
NEW_HOUSEHOLD_FILE ../../household/Household
NEW_VEHICLE_FILE ../../vehicle/Vehicle
#
# General conversion parameters
#
STARTING_HOUSEHOLD_ID 1
STARTING_VEHICLE_ID 1
TIME_OF_DAY_FORMAT SECONDS
RANDOM_NUMBER_SEED 12345
VEHICLE_TYPE_FILE ../../vehicle/VehicleType

#---- airport trips ----
TRIP_TABLE_FILE_1 ../../../../CMAP/Trips/Version4/Input_Trips.airpoe
TRIP_TIME_FILE_1 ../../trips/diurnal.airpoe
TRIP_PURPOSE_CODE_1 1 # counter
TRAVEL_MODE_CODE_1 2 # drive
AVERAGE_TRAVEL_SPEED_1 15 # m/s
VEHICLE_TYPE_1 1 # car
ORIGIN_WEIGHT_FIELD_1 USER1
DESTINATION_WEIGHT_FIELD_1 USER2

#---- external trips ----
TRIP_TABLE_FILE_2 ../../../../CMAP/Trips/Version4/Input_Trips.autopoe
TRIP_TIME_FILE_2 ../../trips/diurnal.autopoe
TRIP_PURPOSE_CODE_2 2 # counter
TRAVEL_MODE_CODE_2 2 # drive
AVERAGE_TRAVEL_SPEED_2 15 # m/s
VEHICLE_TYPE_2 1 # car
ORIGIN_WEIGHT_FIELD_2 USER1
DESTINATION_WEIGHT_FIELD_2 USER2

#---- hbo trips ----
TRIP_TABLE_FILE_7 ../../../../CMAP/Trips/Version4/Input_Trips.hbo
TRIP_TIME_FILE_7 ../../trips/diurnal.hbo
TRIP_PURPOSE_CODE_7 7 # counter
TRAVEL_MODE_CODE_7 2 # drive
AVERAGE_TRAVEL_SPEED_7 15 # m/s
VEHICLE_TYPE_7 1 # car
ORIGIN_WEIGHT_FIELD_7 USER1
DESTINATION_WEIGHT_FIELD_7 USER2

#---- nhb trips ----
TRIP_TABLE_FILE_8 ../../../../CMAP/Trips/Version4/Input_Trips.nhb
TRIP_TIME_FILE_8 ../../trips/diurnal.nhb
TRIP_PURPOSE_CODE_8 8 # counter
TRAVEL_MODE_CODE_8 2 # drive
AVERAGE_TRAVEL_SPEED_8 15 # m/s
VEHICLE_TYPE_8 1 # car
ORIGIN_WEIGHT_FIELD_8 USER1
DESTINATION_WEIGHT_FIELD_8 USER2

#---- hbw trips ----
TRIP_TABLE_FILE_10 ../../../../CMAP/Trips/Version4/Input_Trips.hbw
TRIP_TIME_FILE_10 ../../trips/diurnal.hbw
TRIP_PURPOSE_CODE_10 10 # counter
TRAVEL_MODE_CODE_10 2 # drive
AVERAGE_TRAVEL_SPEED_10 15 # m/s
VEHICLE_TYPE_10 1 # car
ORIGIN_WEIGHT_FIELD_10 USER1
DESTINATION_WEIGHT_FIELD_10 USER2
```

Sample ConvertTrips Control File

- #
- DEFAULT_FILE_FORMAT **TAB_DELIMITED**
- #
- # TRANSIMS network files to be used as input for this run
- #
- NET_DIRECTORY **../../network/production**
- NET_ACTIVITY_LOCATION_TABLE **FullArea_Activity_Location**
- NET_PROCESS_LINK_TABLE **FullArea_Process_Link**
- #
- # New TRANSIMS files to be created by this run
- #
- NEW_TRIP_FILE **../../activity/Trip**
- NEW_POPULATION_FILE **../../household/Population**
- NEW_HOUSEHOLD_FILE **../../household/Household**
- NEW_VEHICLE_FILE **../../vehicle/Vehicle**

Sample ConvertTrips Control File

```
#
# General conversion parameters
#
STARTING_HOUSEHOLD_ID        1
STARTING_VEHICLE_ID          1
TIME_OF_DAY_FORMAT           SECONDS
RANDOM_NUMBER_SEED           12345
VEHICLE_TYPE_FILE            ../../vehicle/VehicleType
#
```

Sample ConvertTrips Control File

```
#---- airport trips ----
#
TRIP_TABLE_FILE_1                ../../../../CMAP/Trips/Version4/Input_Trips.airpoe
TRIP_TIME_FILE_1                 ../../trips/diurnal.airpoe
TRIP_PURPOSE_CODE_1              1     # counter
TRAVEL_MODE_CODE_1               2     # drive
AVERAGE_TRAVEL_SPEED_1           15     # m/s
VEHICLE_TYPE_1                   1     # car
ORIGIN_WEIGHT_FIELD_1            USER1
DESTINATION_WEIGHT_FIELD_1       USER2
#
...
```

Problem Resolution: Access Restrictions

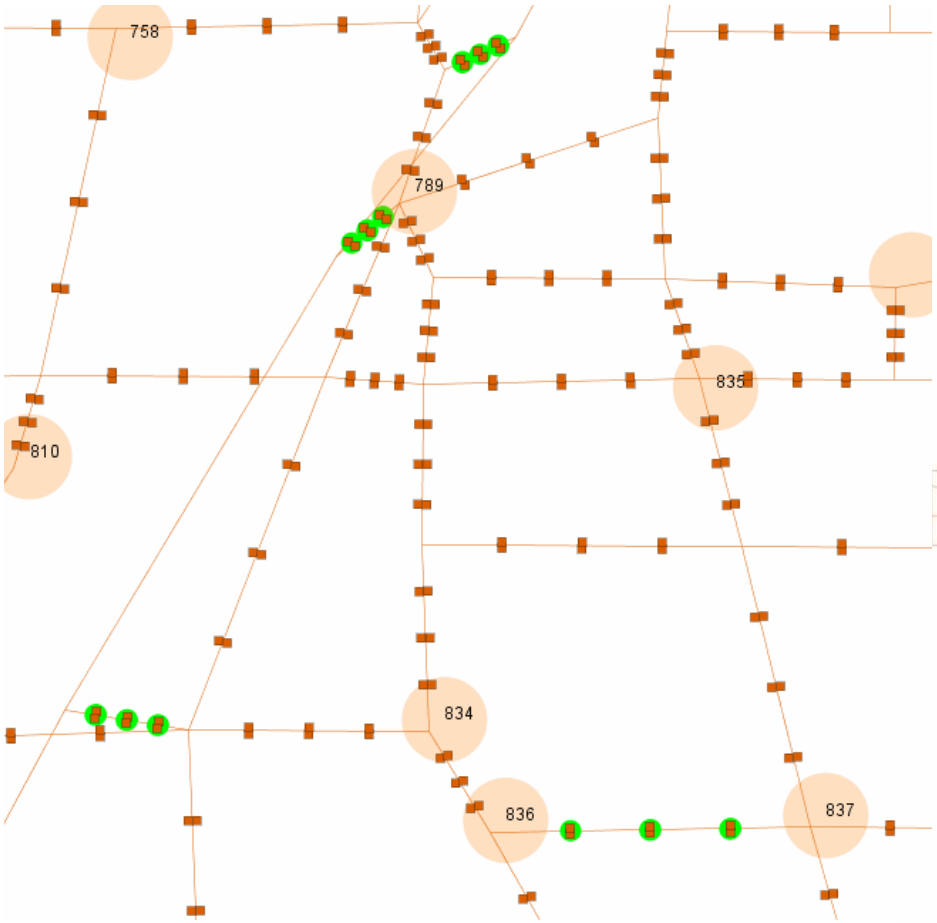

- Example for a typical misconfiguration:
- Assignment of trips to activity locations may lead to truck being placed on roads that don't allow truck traffic
- Solution: LocationData tool and weights

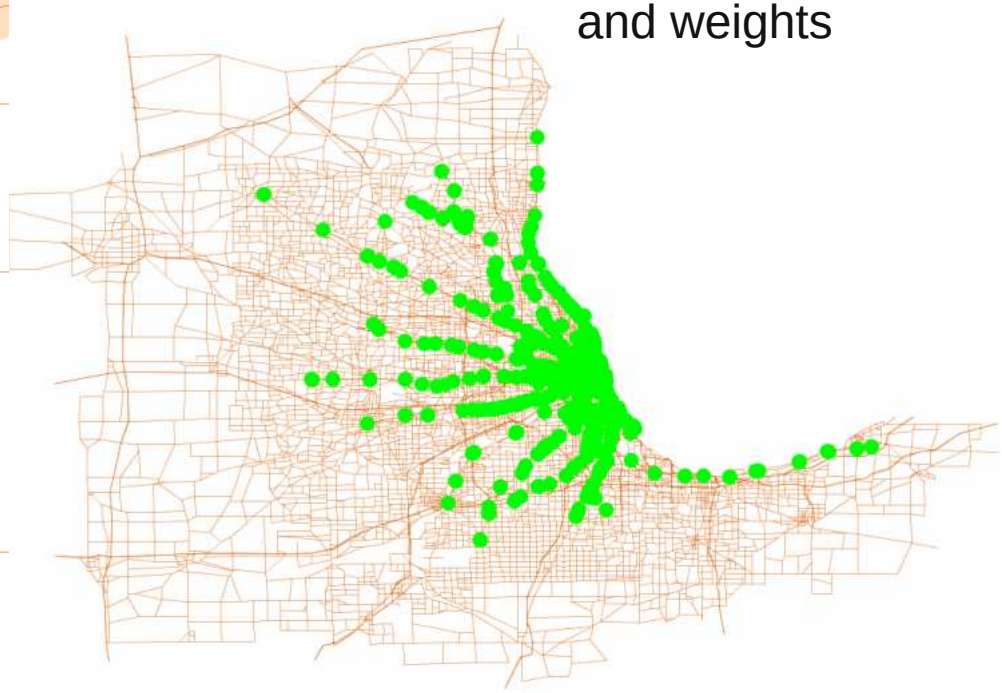

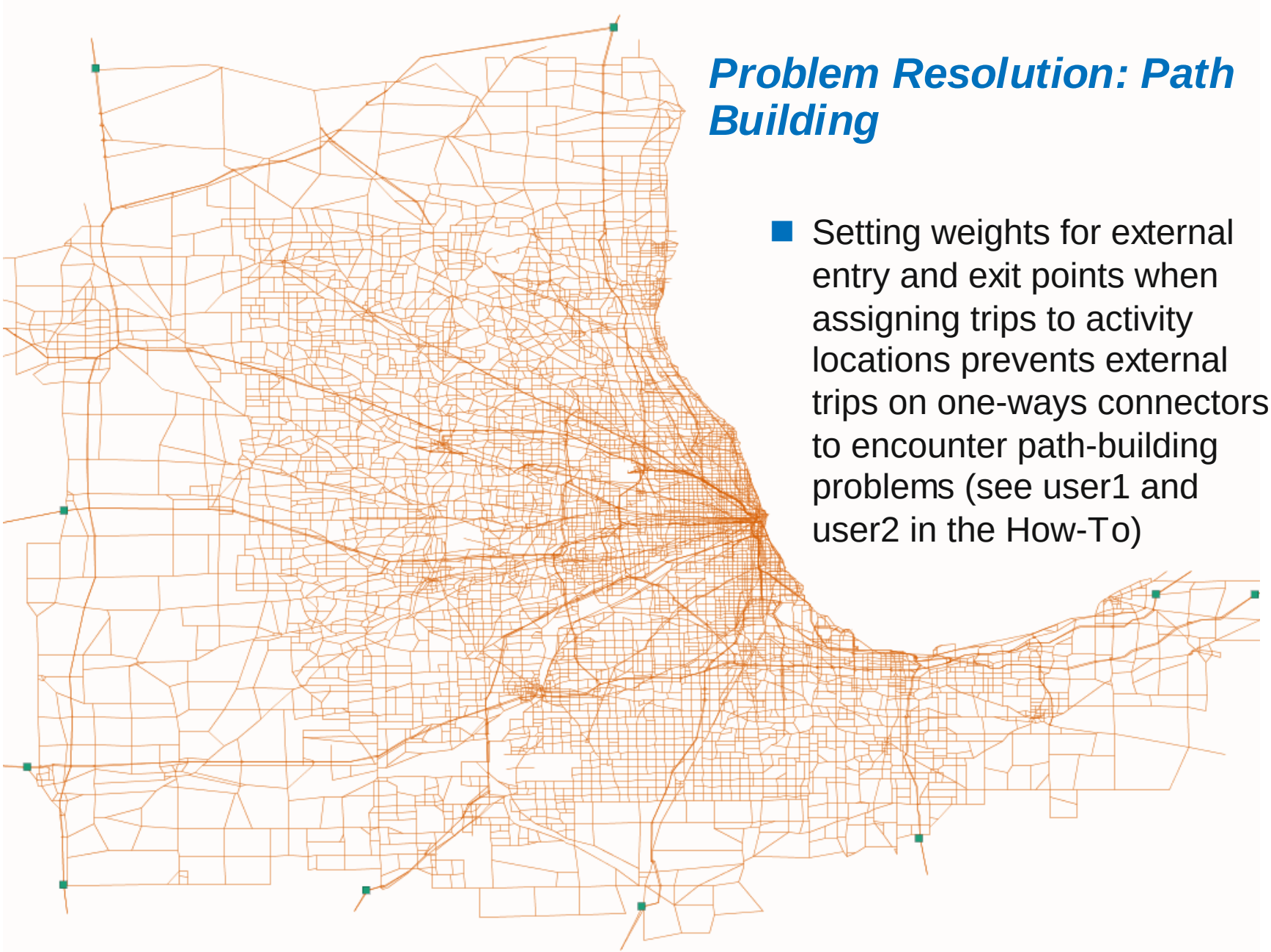

Problem Resolution: Path Building

- Setting weights for external entry and exit points when assigning trips to activity locations prevents external trips on one-ways connectors to encounter path-building problems (see user1 and user2 in the How-To)

Additional Settings

- ConvertTrips is well-documented in a general tool description as well as in one of the How-Tos available from the TRANSIMS site

- A selected list of features:
  - Zone equivalency: Zone groups represent large geographic areas or governmental entities (see sample on the right)
  - Trip Purpose
  - Travel Mode
  - Return Trip Offset
  - ConvertTrips can be run successively to append trips from multiple runs
  - And much more …

Sample Zone Group File

```
1 0 Portland CBD - 1
1 1 1..16
2 0 West Suburbs - 2
2 1 79..307, 1248..1253
3 0 Southwest Suburbs - 3
3 1 308..403, 931..933
4 0 Southeast Suburbs - 4
4 1 404..557, 934..943, 1254..1258
5 0 East Portland - 5
5 1 561..563, 714..721, 731..738, 763..929, 949..961, 963..969
6 0 East Suburbs - 6
6 1 558..560, 564..713, 722..730, 739..762, 1259..1260
7 0 West Portland - 7
7 1 17..78, 930, 944..948, 962, 1247
8 0 Clark County - 8
8 1 970..1246
```

Credits and Acknowledgements

- GIS visualization materials were mostly developed at Argonne based on the TRANSIMS tools developed by AECOM for USDOT
- Chicago road and transit network data used in some of the examples was provided by the Chicago Metropolitan Agency for Planning
- USDOT provided the funding for the development of these training materials
- USDOT provided the funding for the TRACC computing center and the resources necessary to perform these training session