Argonne NATIONAL LABORATORY

... for a brighter future

TRANSIMS Training Course at TRACC

Transportation Research and Analysis Computing Center

Part 7

Convergence Control Using the Feedback

(Alexandria Network Example)

Dr. Young Soo Park

Transportation Research and Analysis Computing Center

Last Updated: April 21, 2008

U.S. Department of Energy

UChicago Argonne LLC

A U.S. Department of Energy laboratory managed by UChicago Argonne, LLC

Contents

Introduction to Feedback

- The goal is to load traffic onto the network and iterating towards the Nash equilibrium
  - Final Goal: Travelers cannot achieve significantly better routes when trying to choose a shorter path, meaning that each traveler chooses the route that's best for the overall population
- Important constraint
  - Travelers choose a mode of transportation according to travel surveys; they are not optimizing their travel by choosing modes
- This is simplified
  - Typically, some activities will need to be modified as well to avoid unrealistic travel constraints

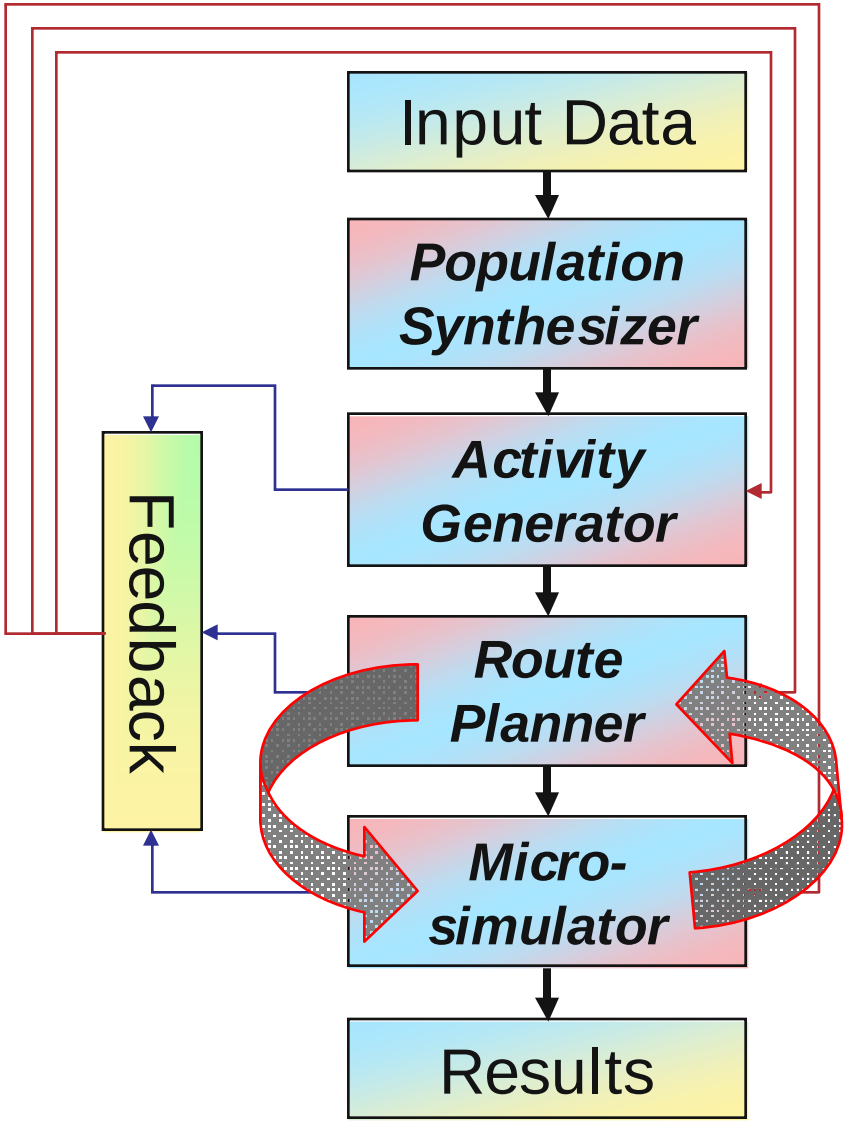

Feedback

- The TRANSIMS equilibration process iterates between router and microsimulator (details follow later)
- Some routes are not feasible, e.g.
  - Significantly longer than dictated by the survey data
  - Not feasible based on the given transportation mode
  - These trips or activities are passed back to the activity generator to determine appropriate alternatives
- In the Microsimulator, vehicles can stall because they are unable to change lanes or make turns
  - Passing the households that own the vehicle back to the router for new routing suggestions may solve the problem
  - Some plans cannot be followed because of time-dependent road closures and other triggers
- Tools are available to select households for rerouting based on many criteria

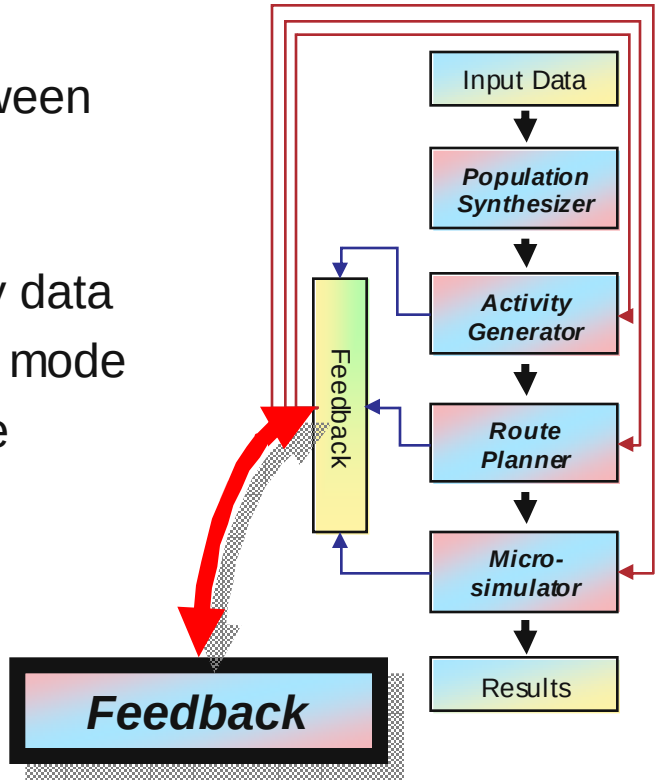

Program Flow

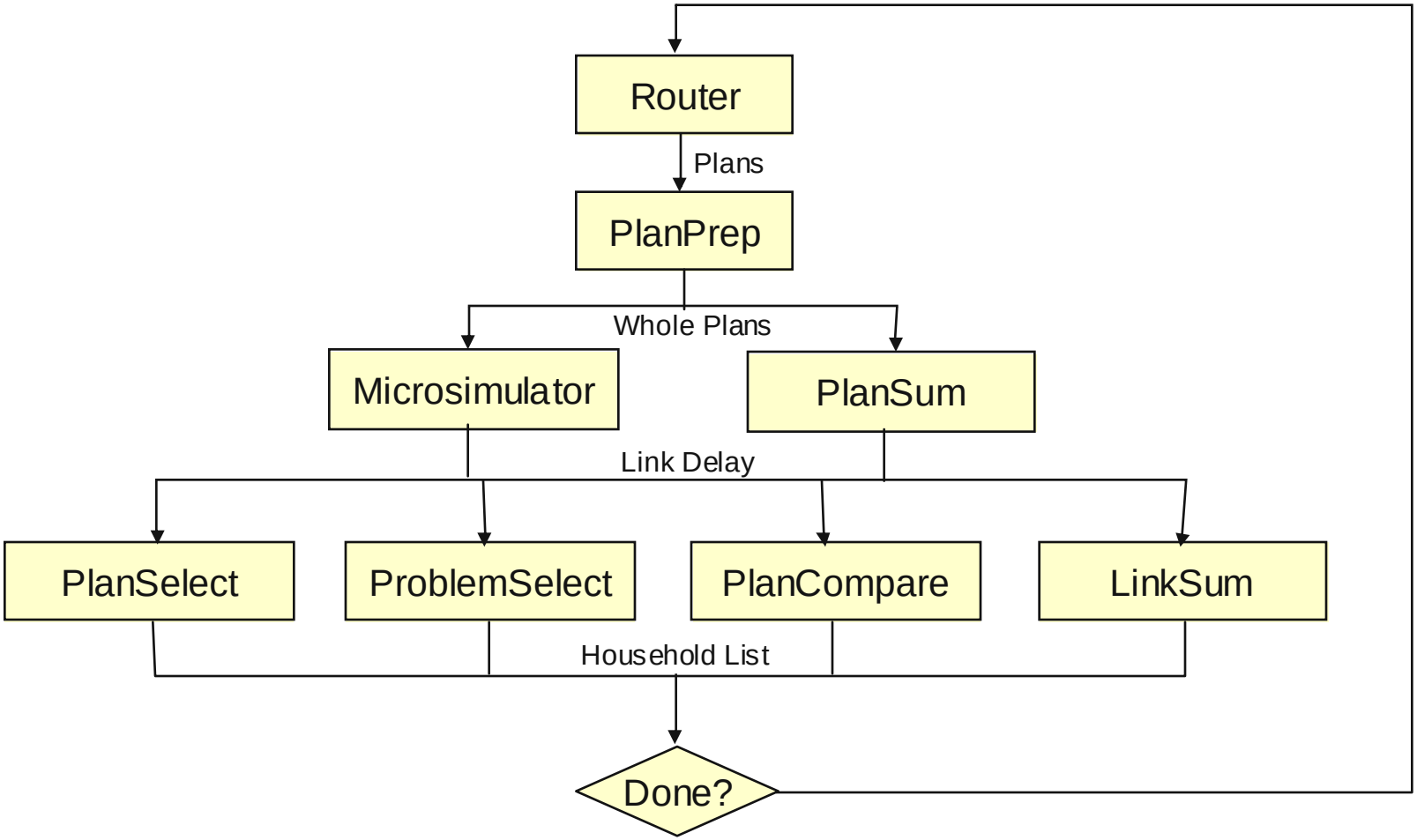

Feedback Procedures

- Router Stabilization
  - Distribute traffic more logically prior to simulation
- Microsimulator Stabilization
  - Debug network and address simulation problems
- User Equilibrium
  - Equilibrate paths (Router) and travel times (Microsimulator)
- System Equilibrium
  - Stabilize link volumes and speed
- Link Delay Averaging
  - Dampen travel time fluctuations to reduce path oscillation and the number of iterations required to convergence

Alexandria Traffic Model Example

- Alexandria.zip
- C:\TransimsWork\Alexandria\
  - activity\ : Trip files and Activity Files are stored
  - **control** : control (*.ctl), batch (*.bat), and report (*.prn) files
  - household\ : Household files are stored
  - model\ : user scripts that implements various model algorithms
  - network\ : Various network data tables are stored
    - *arcview* : Arc View shape files are stored here
  - plans\ : Travel Plan files generated from Router are stored here
  - results\ : Link_Delay files are stored here
  - skims\ : relevant only for activity-based methods
  - survey\ : Surveys (e.g. diurnal distributions) are stored here
  - trips\ : Input Trip Tables are here
  - vehicle\ : Vehicle files are stored

Network Input Files

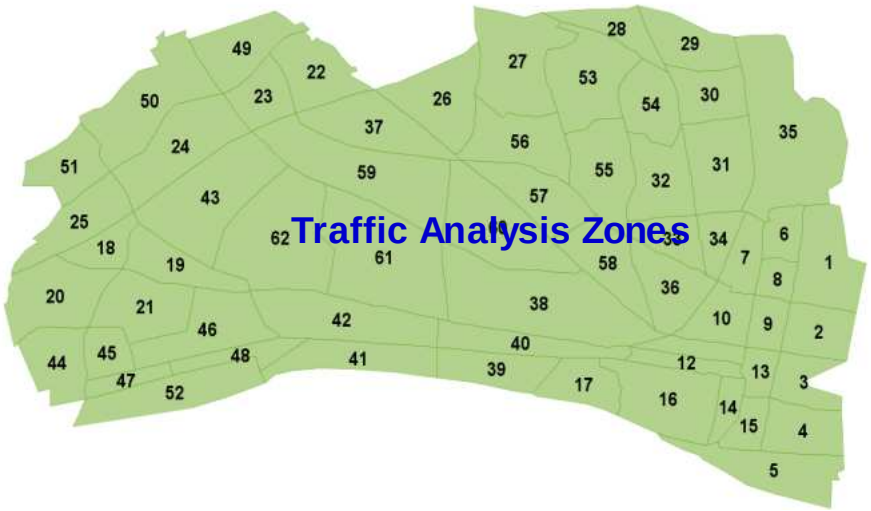

Node Data (Input_Node.txt)

NODE	X_COORD	Y_COORD
70	323511.8	4296015.8
71	323535.8	4295682.3

Link Data (Input_Link.txt)

LINK	STREET	ANODE	BNODE	LENGTH	TYPE	LANES_AB	SPEED_AB	LANES_BA	SPEED_BA	USE
1	EXTERNAL	70	2545	336	EXTERNAL	4	37.5	0	0	ANY
2	EXTERNAL	71	999	316	EXTERNAL	0	0	4	37.5	ANY
3	EXTERNAL	72	2746	151	EXTERNAL	3	37.5	0	0	ANY

- **Link Length** is defined in meters
- **Speed** is defined is meters/second
- **Facility Types**: FREEWAY, EXPRESSWAY, PRINCIPAL, MAJOR, MINOR, COLLECTOR, LOCAL, FRONTAGE, RAMP, BRIDGE, EXTERNAL, XPRESSWAY, PRIARTER, SECARTER, ZONECONN, OTHER, WALKWAY, BIKEWAY, BUSWAY, LIGHTRAIL, HEAVYRAIL, FERRY
- **Vehicle use code**: combination of the following separated by slashes (e.g. CAR/TRUCK/BUS)
  - ANY, WALK, BIKE, CAR, TRUCK, BUS, RAIL, SOV, HOV2, HOV3, HOV4, LIGHTTRUCK, HEAVYTRUCK, RESTRICTED, AUTO, BICYCLE, TAXI, TROLLEY, STREETCAR, LIGHTRAIL, RAPIDRAIL, REGIONRAIL

Zone Data (Input_Zone.txt)

ZONE	X_COORD	Y_COORD	AREATYPE
1	322817.6	4298231.2	2
2	322705.5	4297360.2	2
3	322529.4	4296728.4	2

Shape Data (Input_Shape.txt)

LINK	POINTS	NOTES
X_COORD	Y_COORD	
102	44	
316814.3	4301507.9	
316810.7	4301502.0	

Network Input Files (Alexandria)

- Network Data Display with ArcGIS

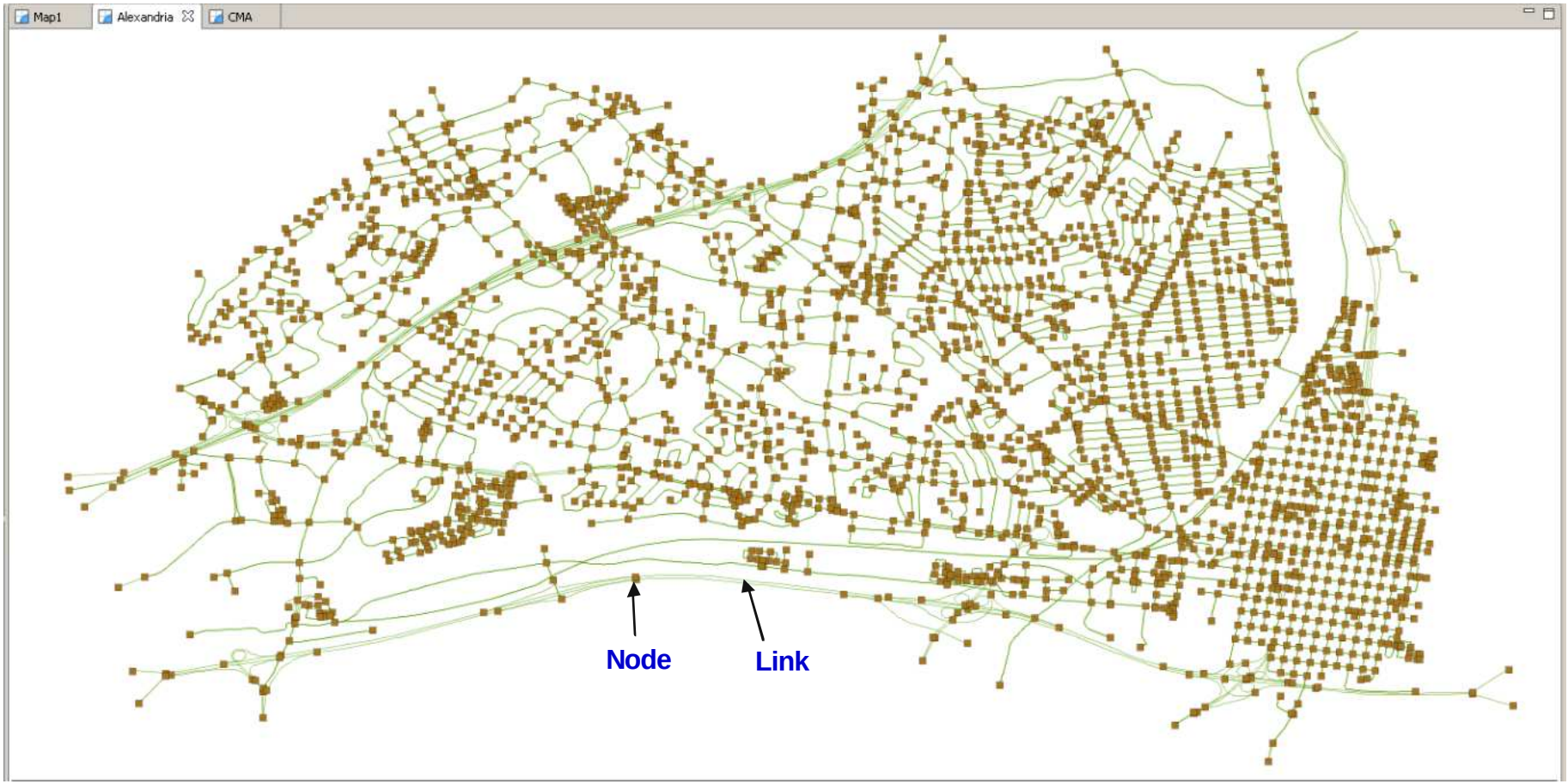

- Prepares and Converts Network Data to the format required by TRANSIMS programs.

DataPrep.bat

```
set BINDIR="C:\TRANSIMS40\bin"
%BINDIR%\TransimsNet.exe TransimsNet.ctl
%BINDIR%\IntControl.exe IntControl.ctl
%BINDIR%\TransitNet.exe TransitNet.ctl
%BINDIR%\ArcNet.exe ArcNet.ctl
```

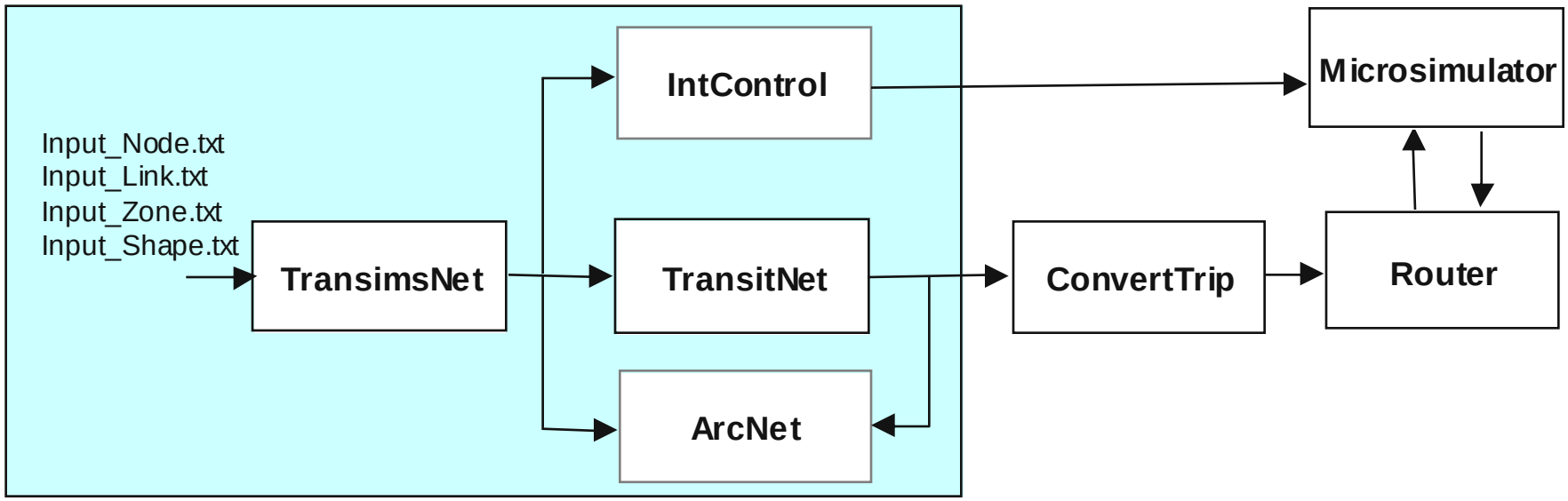

Output Files from TransimsNet.ctl

- /network/

Node

NODE	X_COORD	Y_COORD	NOTES
70	323511.80	4296015.80	External Station
71	323535.80	4295682.30	External Station
72	322196.10	4301400.80	External Station

Link

LINK	STREET	ANODE	BNODE	LENGTH	SETBACK_A	SETBACK_B	BEARING_A	BEARING_B	TYPE	LANES_AB	LEFT_AB	RIGHT_AB	SPEED_AB	FSPD_AB	CAP_AB	LANES_BA	LEFT_BA	RIGHT_BA	SPEED_BA	FSPD_BA	CAP_BA	USE	NOTES
1	EXTERNAL	70	2545	336.00	0.0	0.0	233	233	EXTERNAL	4	0	0	45.0	37.5	8000	0	0	0	0.0	0.0	0	ANY	External Connector

Activity_Location

ZONE	X_COORD	Y_COORD	AREATYPE
1	322817.6	4298231.2	2
2	322705.5	4297360.2	2
3	322529.4	4296728.4	2

Pocket Lane

POCKET	LINK	NODE	OFFSET	LANES	TYPE	LENGTH	NOTES
1	112	118	0.0	3	T	40.0	Right Turn Lane
2	207	1496	0.0	1	T	40.0	Left Turn Lane
3	207	1496	0.0	4	T	40.0	Right Turn Lane

And more…

- Traffic Network Components

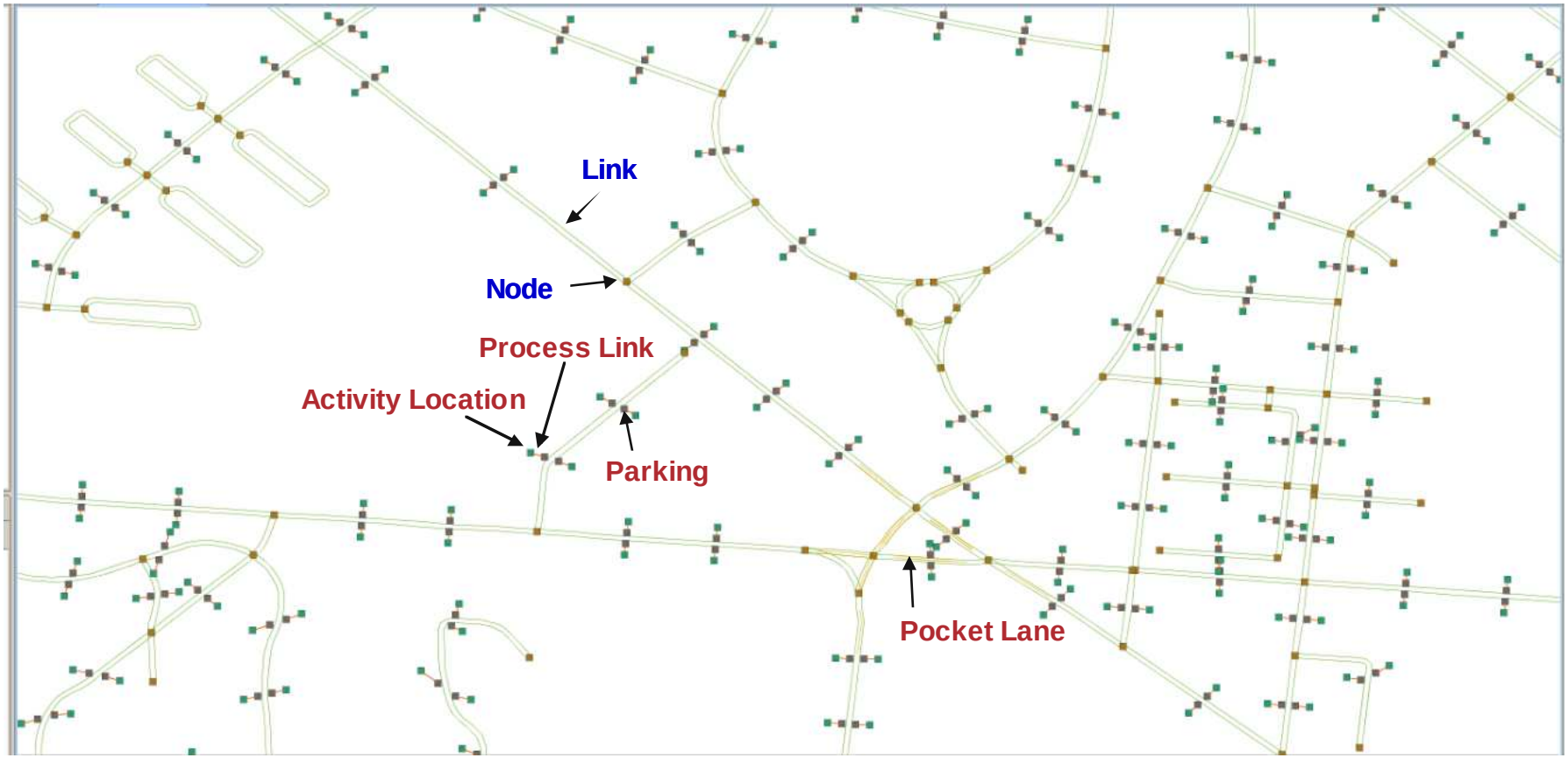

- Transit Routes and Transit Stops

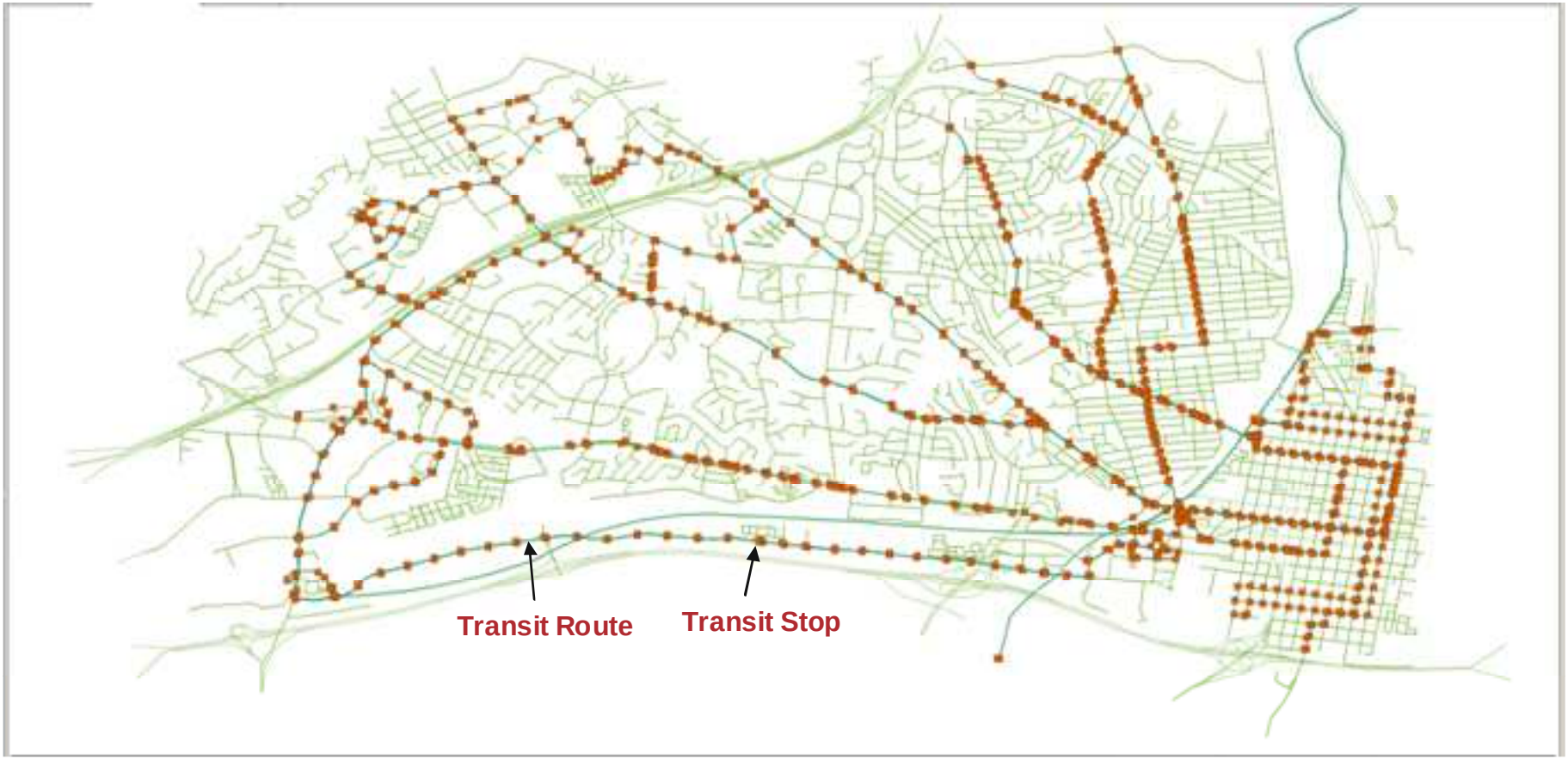

A Few Caveats

- Warning and Error Messages
  - "Nodes Missing" error when executing TransimsNet
    - *Cause: Input_Nodes includes nodes for Transits nodes that do not have connecting road links*
    - *Fix:*
      - Make a list of those nodes,
        - *e.g. 'Input_Keep_Nodes.txt'*
      - Add a line in TransimsNe.ctl
      - Run TransimsNet again

- TransitNet generates *_2 files
  - Activity_Location_2
  - Parking_2
  - Process_Link_2

```
529
558
673
842
1172
1512
1550
1922
2092
2285
2297
2350
2823
3090
3104
3105
3165
3251
7349
7807
```

```
#---- Input Files ----

NET_DIRECTORY                ../network
NET_NODE_TABLE               Input_Node.txt
NET_LINK_TABLE               Input_Link.txt
KEEP_NODE_LIST               Input_Keep_Nodes.txt
NET_SHAPE_TABLE              Input_Shape.txt
NET_ZONE_TABLE               Input_Zone.txt

#---- Output Files ----

NEW_DIRECTORY                ../network
NEW_NODE_TABLE               Node
NEW_LINK_TABLE               Link
NEW_SHAPE_TABLE              Shape
NEW_ACTIVITY_LOCATION_TABLE  Activity_Location
NEW_PARKING_TABLE            Parking
NEW_PROCESS_LINK_TABLE       Process_Link
NEW_POCKET_LANE_TABLE        Pocket_Lane
NEW_LANE_CONNECTIVITY_TABLE  Lane_Connectivity
NEW_UNSIGNALIZED_NODE_TABLE  Sign_Warrants
NEW_SIGNALIZED_NODE_TABLE    Signal_Warrants
LINK_NODE_EQUIVALENCE        Link_Node
```

Network Error Debugging

- Warnings encountered during TransitNet Execution
  - Warning: Node 112 has Exit Links but No Entry Links
  - Warning: Node 1034 has Entry Links but No Exit Links
  - Warning: Node 2540 has Entry Links but No Exit Links
  - Warning: Node 3625 has Entry Links but No Exit Links
  - Warning: Link 4526 @ Node 1691 has no exit links.

Inconsistencies at the Network Boundary Node-Links

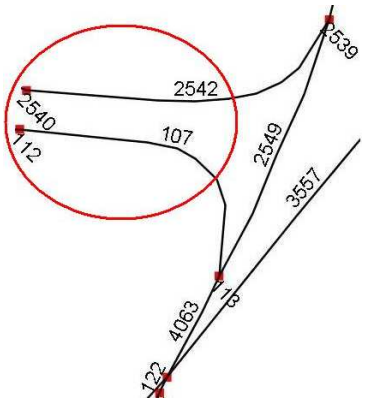

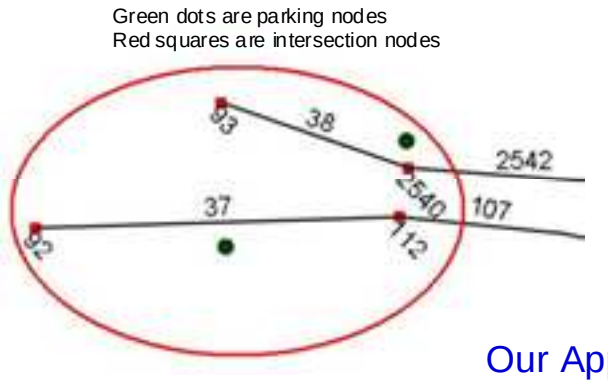

Our Approach to Resolution:

- Add new external nodes and links

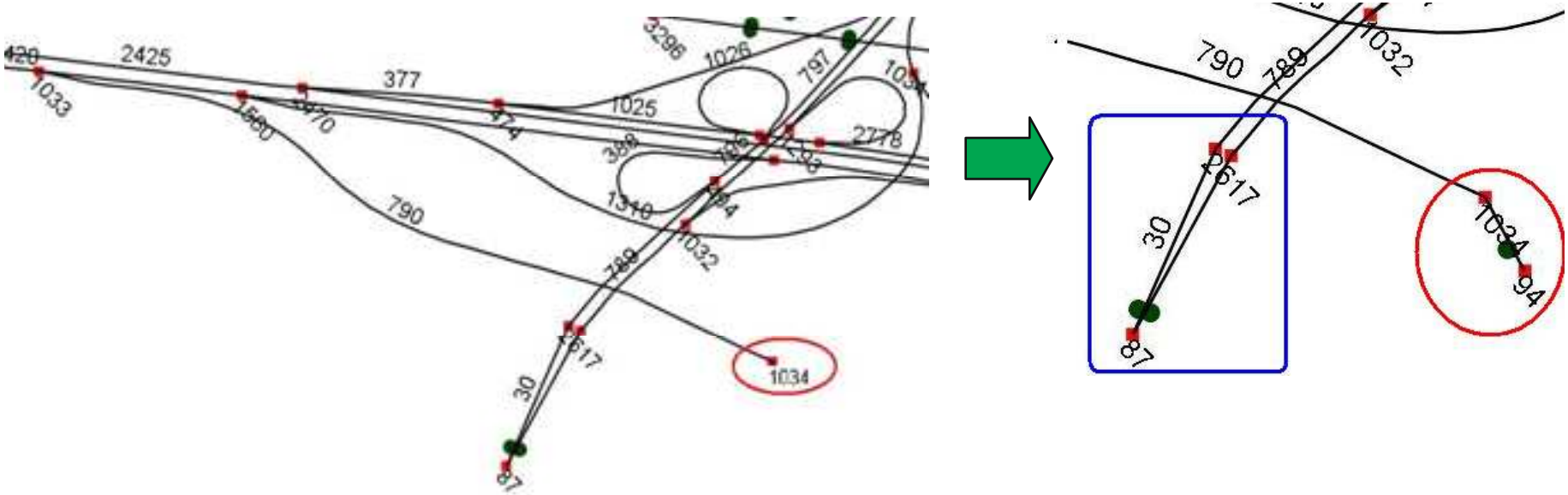
2425
377
1033
1025
797
2778
790
1032
1034
30
87
94

Inconsistent Network Data Entries

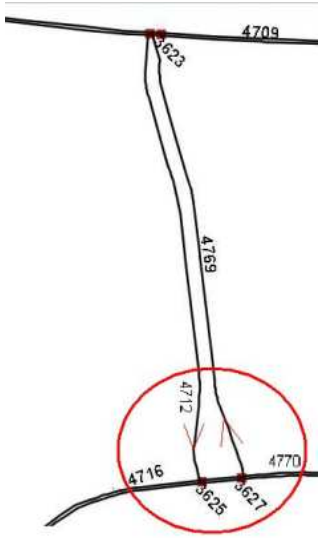

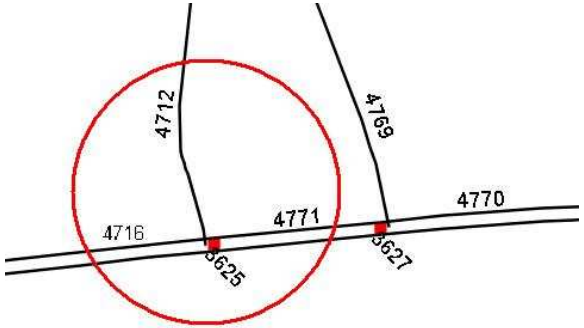

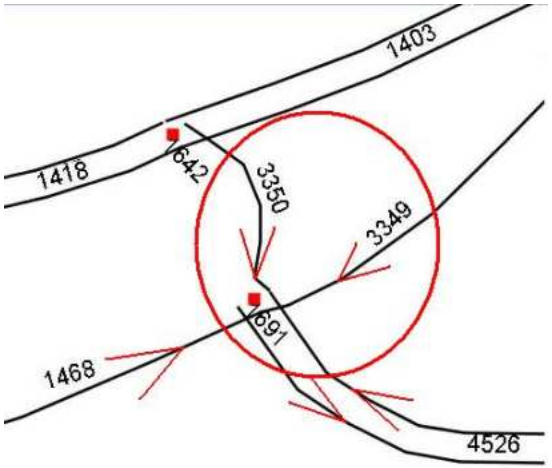

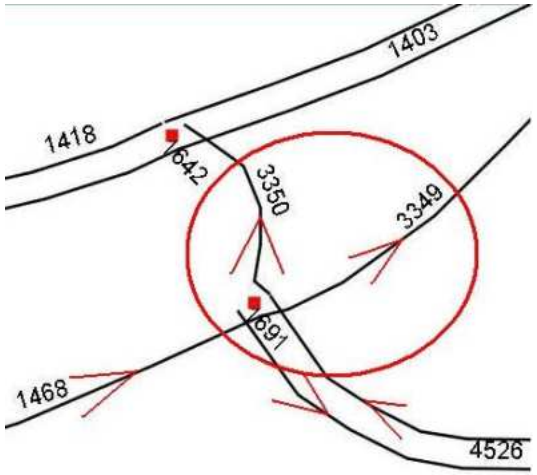

Trip Generation

- Generates Trips from Activity or Zone-to-Zone trip table

```
set BINDIR="C:\TRANSIMS40\bin"

%BINDIR%\ConvertTrips.exe ConvertTrips.ctl
```

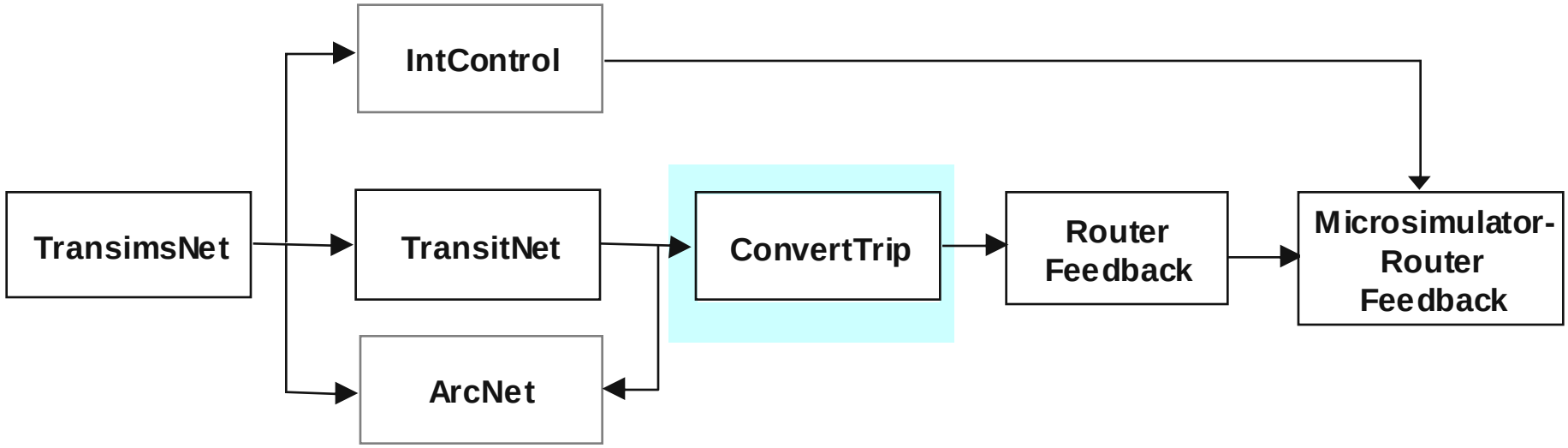

Trip Generation

- ConvertTrip
  - Convert Zone-to-Zone Traffic Table to Location-to-Location Trips

Zone-to-Zone Trip Table

ORG	DES	TRIPS
1	**1**	**450**
1	2	440
1	3	208
1	4	614
1	5	16
1	6	17
2	1	429
2	2	446
2	3	213
2	4	638
2	5	11
2	6	12
3	1	203
3	2	209
3	3	112

+

Diurnal Distribution

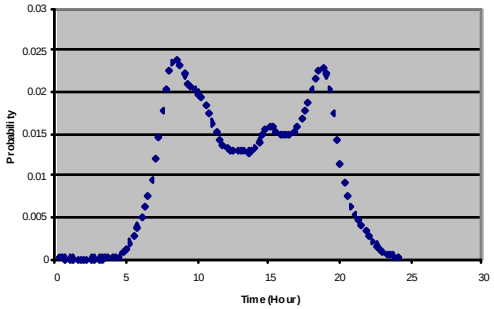

Traffic Zones & Activity Locations

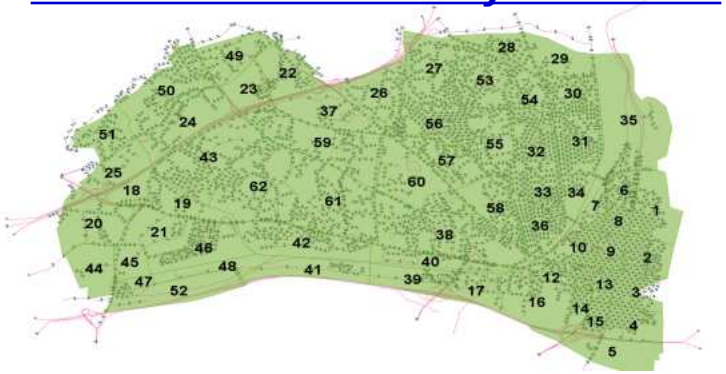

=

- **Trips**
- **Household**
- **Population**
- **Vehicle**

ConvertTrip.ctl

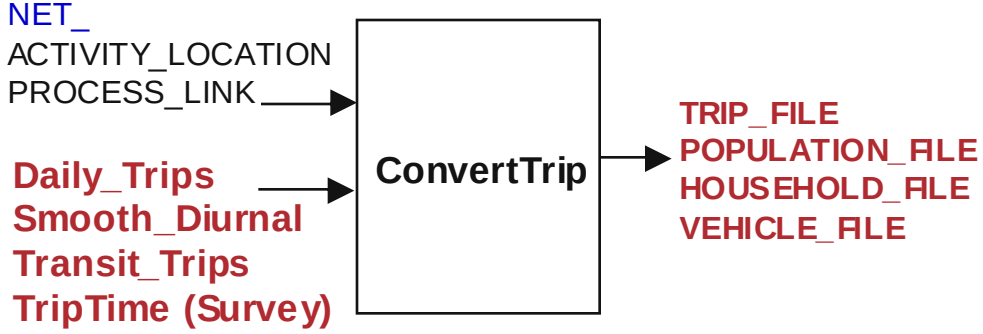


```
TITLE                          Convert Alexandria Trip Tables
DEFAULT_FILE_FORMAT            TAB_DELIMITED
PROJECT_DIRECTORY              ../
#---- Input ----
NET_DIRECTORY                  ../network
NET_ACTIVITY_LOCATION_TABLE    Activity_Location_2
NET_PROCESS_LINK_TABLE         Process_Link_2
#---- auto HBW SOV trips ----
TRIP_TABLE_FILE_1              trips/HBW_SOV_PA.txt
TRIP_TIME_FILE_1               survey/HBW_SOV_PA_Diurnal.txt
TIME_CONTROL_POINT_1           DESTINATION
ORIGIN_WEIGHT_FIELD_1          NULL
DESTINATION_WEIGHT_FIELD_1     NULL
TRIP_PURPOSE_CODE_1            1
TRAVEL_MODE_CODE_1             2
AVERAGE_TRAVEL_SPEED_1         15
VEHICLE_TYPE_1                 1
VEHICLE_SUBTYPE_1              0
#---- HBW transit trips ----
TRIP_TABLE_FILE_7              trips/HBW_TRN_PA.txt
TRIP_TIME_FILE_7               survey/HBW_TRN_PA_Diurnal.txt
TIME_CONTROL_POINT_7           DESTINATION
ORIGIN_WEIGHT_FIELD_7          NULL
DESTINATION_WEIGHT_FIELD_7     NULL
TRIP_PURPOSE_CODE_7            1
TRAVEL_MODE_CODE_7             3
AVERAGE_TRAVEL_SPEED_7         10
VEHICLE_TYPE_7                 4
VEHICLE_SUBTYPE_7              0
#---- Output ----
TRIP_FILE                      activity/Trip
POPULATION_FILE                household/Population
HOUSEHOLD_FILE                 household/Household
VEHICLE_FILE                   vehicle/Vehicle
STARTING_HOUSEHOLD_ID          1
STARTING_VEHICLE_ID            1
TIME_OF_DAY_FORMAT             SECONDS
MINIMUM_TRAVEL_TIME            180
RANDOM_NUMBER_SEED             14445
```

- Output:

Trip

HHOLD	PERSON	TRIP	PURPOSE	MODE	VEHICLE	START	ORIGIN	ARRIVE	DESTINATION	CONSTRAINT
1	1	1	1	1	1	30342	1877	31049	4159	1
2	1	1	1	2	2	29133	3178	29918	6947	1
3	1	1	1	2	3	26788	1890	27513	2956	1

Household

HHOLD	LOCATION	PERSONS	WORKERS	VEHICLES
1	1877	1	1	1
2	3178	1	1	1
3	1890	1	1	1

Population

HHOLD	PERSON	AGE	GENDER	WORK	DRIVE
1	1	25	1	1	1
2	1	25	1	1	1
3	1	25	1	1	1
4	1	25	1	1	1

Vehicle

VEHICLE	HHOLD	LOCATION	TYPE	SUBTYPE
1	1	1877	1	0
2	2	3178	1	0
3	3	1890	1	0
4	4	4167	1	0

Feedback Process

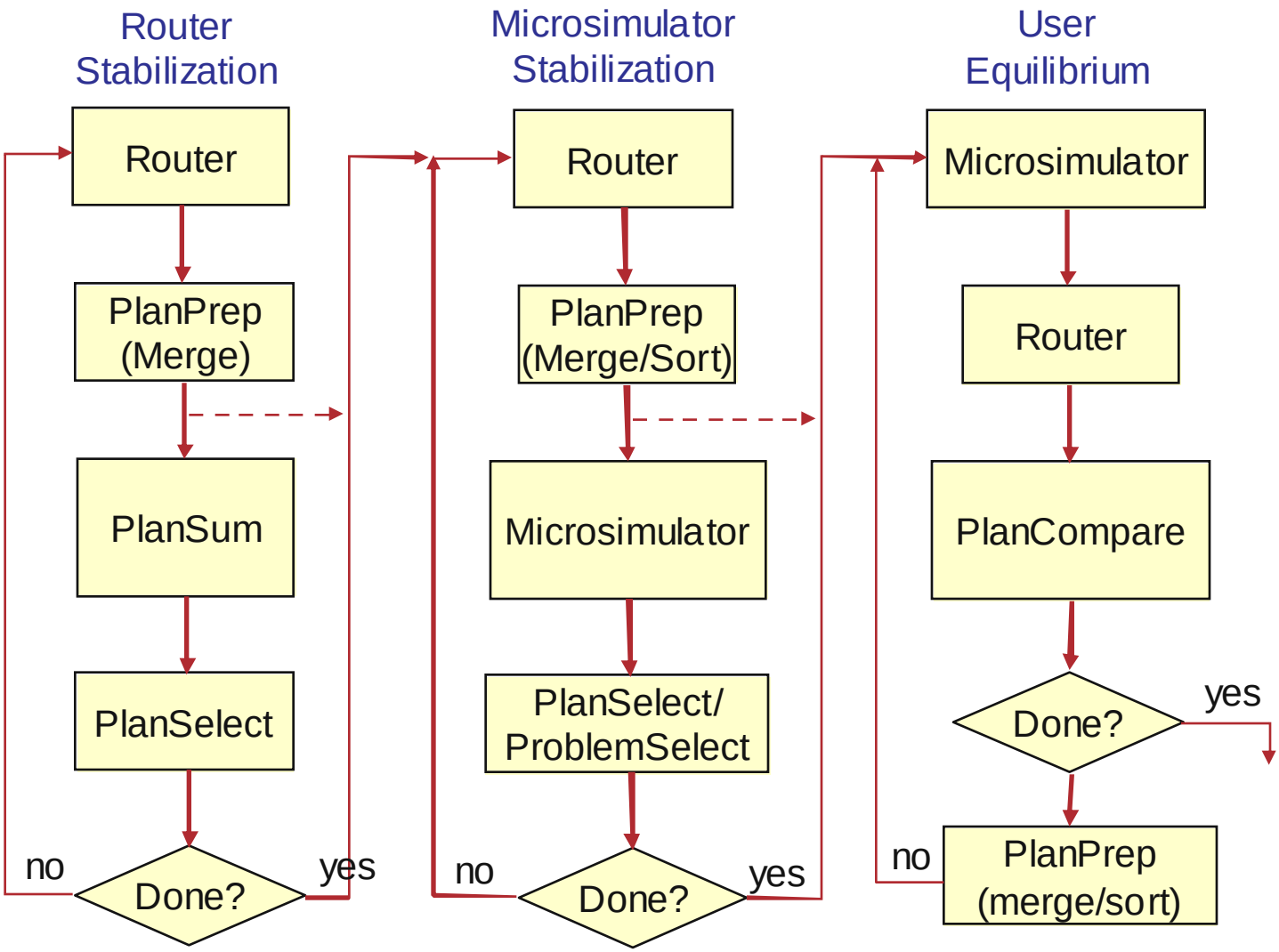

Router Stabilization

- Objectives
  - Resolve Network Problems
  - Refine Travel Plans to logically distribute traffic prior to Microsimulation

- Feedback Process
  - Route (Router)
  - Merge (PlanPrep with 'Traveler' option)
  - Estimate Link Delay (PlanSum)
  - Select (PlanSelect)

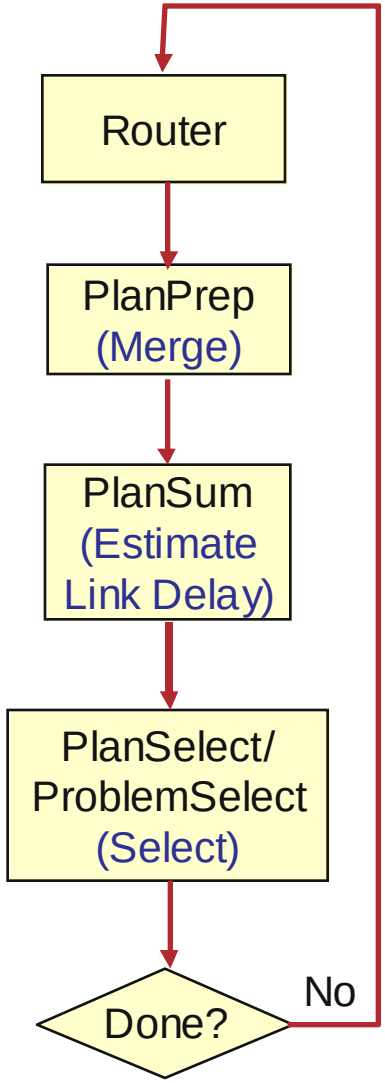

Router

- Router
  - Builds Time dependent Minimum Impedance Travel Paths (**Plans**) for Trips or Activities belonging to a specified list of Households
    - *Impedance: Time, Cost, Penalty*
  - 294362 households processed
  - You will get many problems

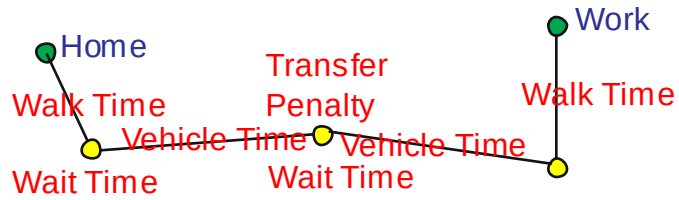

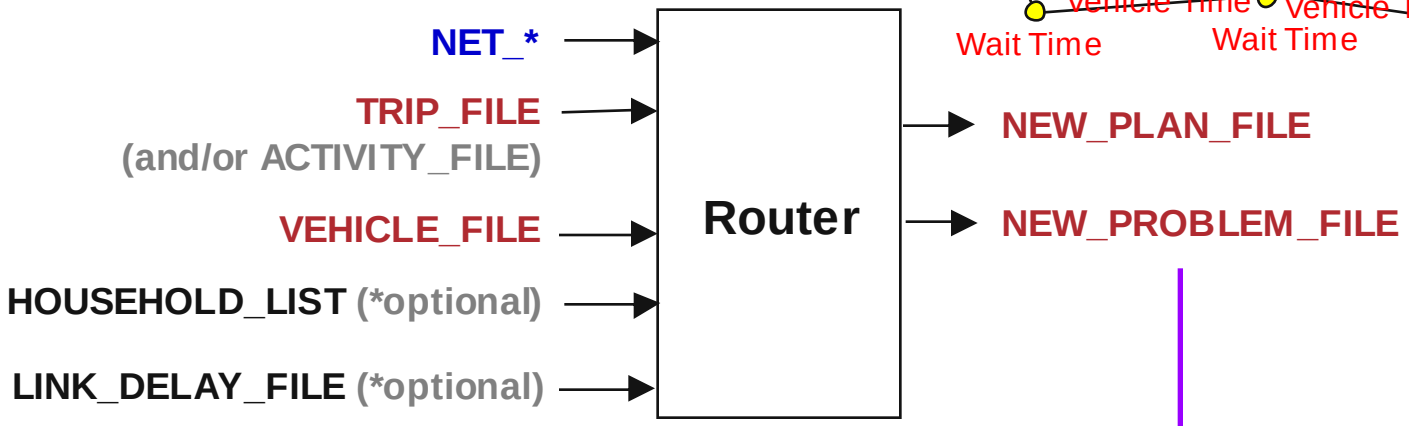

HHOLD	PERSON	TRIP	MODE	PROBLEM	START	ORIGIN	ARRIVE	DESTINATION
489	1	1	2	1	25064	1894	26660	32
490	1	1	2	1	29876	4147	31446	32
668	1	1	2	1	33911	871	35893	3
672	1	1	2	1	38629	3709	40664	3
693	1	1	2	1	32564	3707	34589	3
1013	1	1	2	1	29235	3834	30669	32

Router Stabilization – Network Debugging

- Path Building Problem
  - Cause: Inconsistent trip assignment to one-way segment of external links
  - Resolution: Modify Activity location table & ConvertTrip
    - *Origin/destination weight key*
    - *Disable return trip offset*
  - Routing Problems: 20855 -> 1091

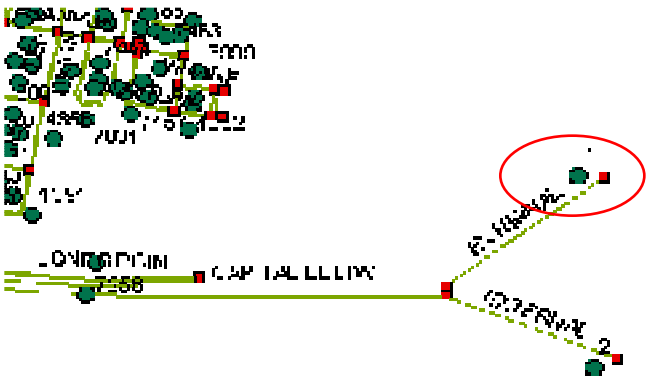

ConvertTrip.ctl

TRIP_TABLE_FILE_1	trips/HBW_SOV_PA.txt
TRIP_TIME_FILE_1	survey/HBW_SOV_PA_Diurnal.txt
TIME_CONTROL_POINT_1	DESTINATION
ORIGIN_WEIGHT_FIELD_1	**user1**
DESTINATION_WEIGHT_FIELD_1	**user2**
TRIP_PURPOSE_CODE_1	1
TRAVEL_MODE_CODE_1	2
AVERAGE_TRAVEL_SPEED_1	3
VEHICLE_TYPE_1	1
VEHICLE_SUBTYPE_1	0

Activity Location

LOCATION	LINK	NODE	OFFSET	X_COORD	Y_COORD	ZONE	**user1**	**user2**	NOTES
1	1	2545	306	323487	4295999.1	70	**1**	**0**	External Origin
2	2	71	30	323507.4	4295691.8	71	**0**	**1**	External Destination
3	3	2746	121	322196.1	4301371	72	**1**	**0**	External Origin
4	4	72	30	322201.2	4301371.4	72	**0**	**1**	External Destination
5	5	796	392	319503.3	4301961.9	73	**1**	**0**	External Origin

- ***Another Path Building Problem***
  - ***Problem***: Link 4030 (Jefferson Davis) had a missing link. This resulted in problems for the nearby activity locations.
  - ***Solution***: Bnode value of link 4030 was changed from 2631 to 2384. This completed the link and continuation of the road

- Another Path Building Problem
  - ***Problem**:* Here the link 198 (Commonwealth) was connected from Node 150 to Node 225 but, because of this there was no connection of that link with link 4391 (Luna Park). This created lot of access restriction and path building problems for activity locations that were around that area.
  - ***Solution**:* Link 198 was changed to be connected to Node 150 to Node 161. Another link called 204 (Commonwealth) was introduced to be connected from Node 225 to Node 161, thus making the traffic flow freely from Luna Park to Commonwealth.

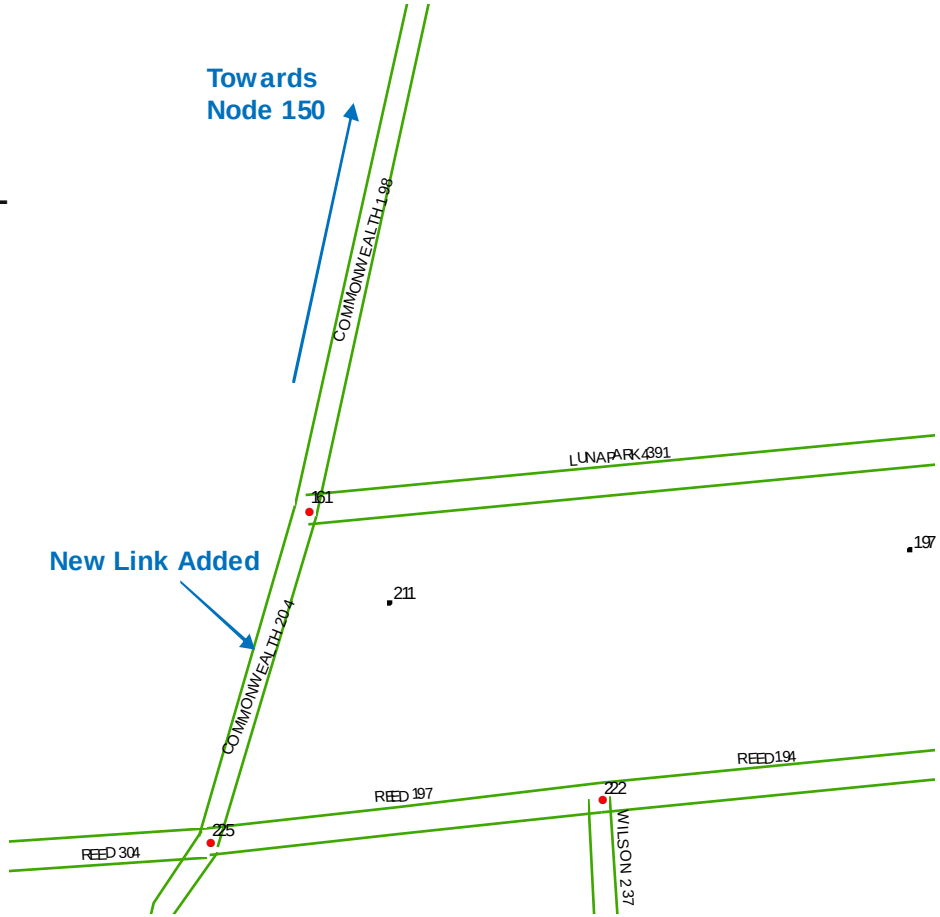

- ***Another Path Building Problem***
  - ***Problem***: Link 4572 was going in the wrong direction. This created Path building problems for the activity locations in the near by area.
  - ***Solution***: The direction was changed Lanes AB and SpeedAB were filled with 1 and 22.5 respectively while Lanes BA and SpeedBA parameters were make 0.

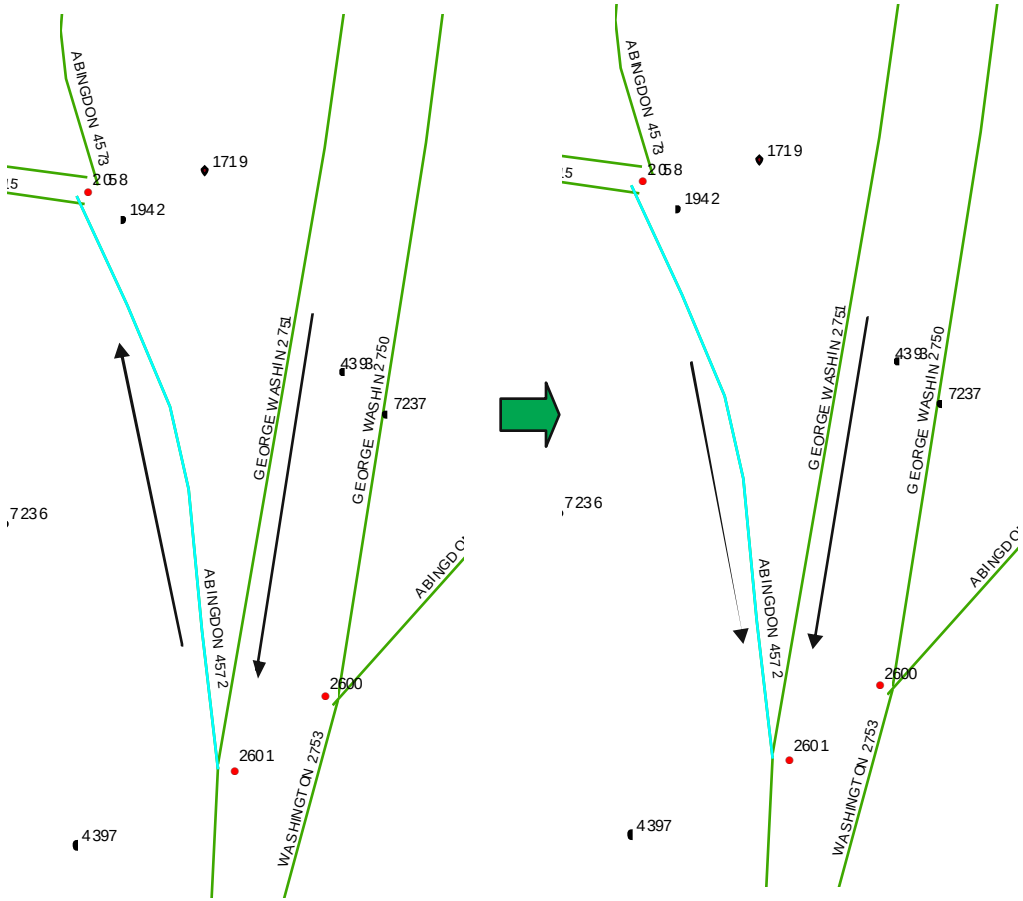

- Debug Network Errors (cont'd)
  - Access Restriction Problem
    - *Cause: The road is restricted to a certain vehicle type only*
    - *Resolution: Change the access type of the link*
  - Zero Node Problem
    - *Cause: Origin and Destination in the same link*
    - *Resolution: Practically not worth it*
  - Circuity Problem
    - *Cause: Cannot find path in given circuity*
    - *Resolution: Increase circuity ratio or Give up*

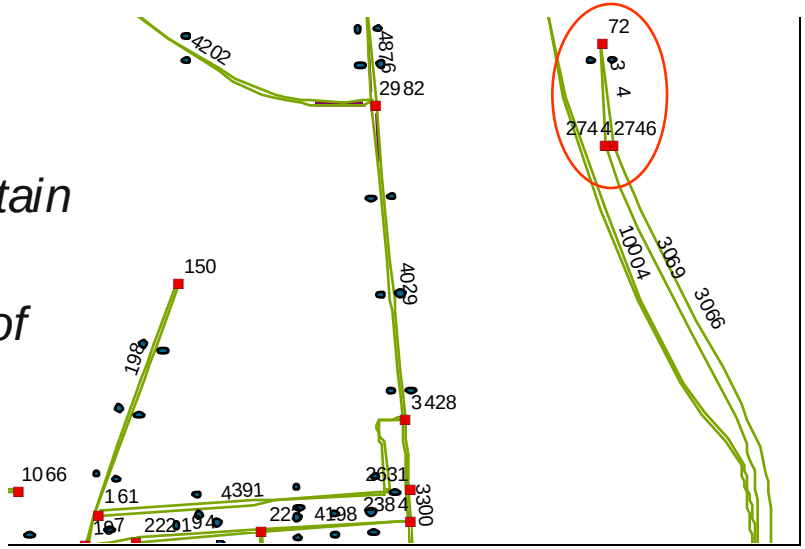

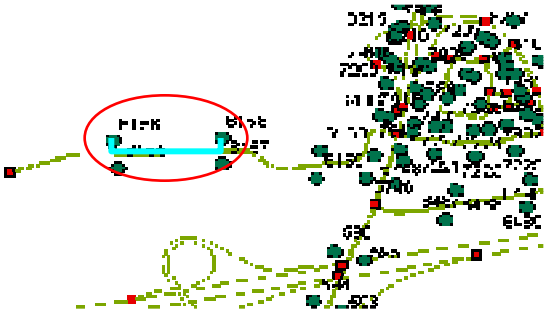

- **Router Run Try 1:**
  - ***Conditions***:
    - *ConvertTrip.ctl – No Mid-trip data, the block which deals with Return_Trip_Offset key was also commented out.*
  - Router run gave 23 Problems, which had only 2 path related problems.

- **Router Run Try 2:**
  - ***Conditions***:
    - *ConvertTrip.ctl – No Mid-trip data, the block which deals with Return_Trip_Offset key is **not** commented out, but Return_trip_offset key is commented out.*
  - Router run gave 244 Problems, which had 17 path related problems at activity locations 7236 and 7237. Here is where Link 4572 is fixed, which is described in the following section.

- ***Other Path Building Problem***
  - ***Problem***: Activity Locations 1 and 42 are both External Origin Activity Locations. The problems file showed that problems were created when activity location 1 and 42 were used as destinations. This means that even though it was origin traffic tried to go there which is not possible.
  - ***Solution***: Activity Location 1 falls in Zone 70. All of the trip table files that ConvertTrip.ctl uses, namely HBW_HOV#_AP.txt, do have some traffic destined for Zone 70 which is incorrect because Location 1 is only an Origin. Similarly, Activity Location 42 falls in Zone 90 and the input data has some traffic destined there. Eliminating this should take care of the path building problems and the network will be left with only Zero Node problems.

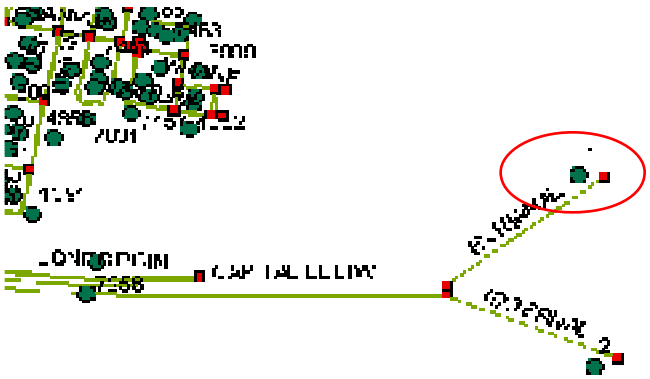

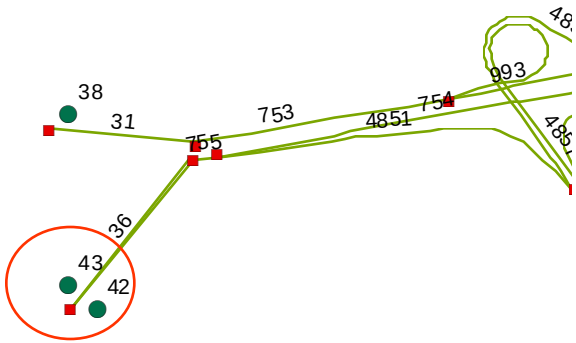

Input_link.txt File Changes

Description	Field	Initial	Change	Remark
1, 2, 3, 4, 5, 9, 13, 14, 15, 18, 19, 31, 34, and 36 (External)	Use	any	car/truck/bus	Any means that people can walk on the freeway
36 (External)	lanes_BA	1	0	Freeway with one-way traffic not two-way traffic
37, 38, 39, 40 (External)			new	Required external links added to corresponding network links so Transims can create external parking lots.
1129 (George Washington)	Lanes_AB	3	2	wrong number of lanes
1129 (George Washington)	Use	car/bus	car/truck/bus	
1223 (George Washington)	Lanes_AB	3	2	wrong number of lanes
1223 (George Washington)	Use	car/bus	car/truck/bus	
1560 (George Washington)	Lanes_AB	3	2	wrong number of lanes
1560 (George Washington)	Use	car/bus	car/truck/bus	
1731 (George Washington)	Lanes_AB	3	2	wrong number of lanes
1731 (George Washington)	Use	car/bus	car/truck/bus	
2421 (Clermont)	Lanes_AB	2	1	exit ramp had too many lanes, over congested
3066 (George Washington)	Lanes_AB	3	2	wrong number of lanes
3066 (George Washington)	Use	car/bus	car/truck/bus	
3069 (George Washington)	Lanes_AB	3	2	wrong number of lanes
3069 (George Washington)	Use	car/bus	car/truck/bus	
3300 (Jefferson Davis)		2	removed	link not needed
3349 (Kenmore)	lanes_ab&ba	1ba	1ab	one-way street flowing in wrong direction
3350 (Van Dorn)	lanes_ab&ba	1ba	1ab	one-way street flowing in wrong direction
4029 (Jefferson Davis)	node	2631	3428	traffic over flow due to over extended link
4029 (Jefferson Davis)	length	569	455	traffic over flow due to over extended link
4030 (Jefferson Davis)	Bnode	2631	2384	missing link between nodes
4716 (Edsall)	node	3627	3625	traffic over flow due to over extended link at intersection
4716 (Edsall)	length	912	871	traffic over flow due to over extended link at intersection
4771 (Edsall)	link		new	connect between two nodes
4796 (Clermont)	lanes_ab	2	3	too few lanes couse traffic over flow
6000 (External)	link	6000	40	
198 (Commonwealth)	node	225	161	link did not connect to a node in the middle
204 (Commonwealth)			new	link added as changes were made in link 198
4572 (Abingdon)	AB	1	0	going in wrong direction
4573 and 4574	AB	1	0	going in wrong direction

Input_node.txt File Changes

Description	Field	Initial	Change	Remark
92, 93, and 94 (External)	node		car/truck/bus	Any means that people can walk on the freeway

Input_shape.txt File Changes

Description	Field	Initial	Change	Remark
4029	points	10	7	removed last three x_coord and y_coord
4716	points	51	48	removed last three x_coord and y_coord

Router Stabilization – Feedback

- Refine Travel Plans to logically distribute traffic prior to Microsimulation

- Feedback Process
  - Router
  - PlanPrep with 'Traveler' option (Merge)
  - PlanSum (Estimate Link Delay)
  - PlanSelect (Select household for feedback)
    - *Random Re-Routes*
    - *VC Ratio*
      - Re-route travelers whose path includes high V/C ratio links
    - *Time Difference*
      - Re-route travelers whose trip duration in the Plan file is significantly different from the travel time calculated from the path

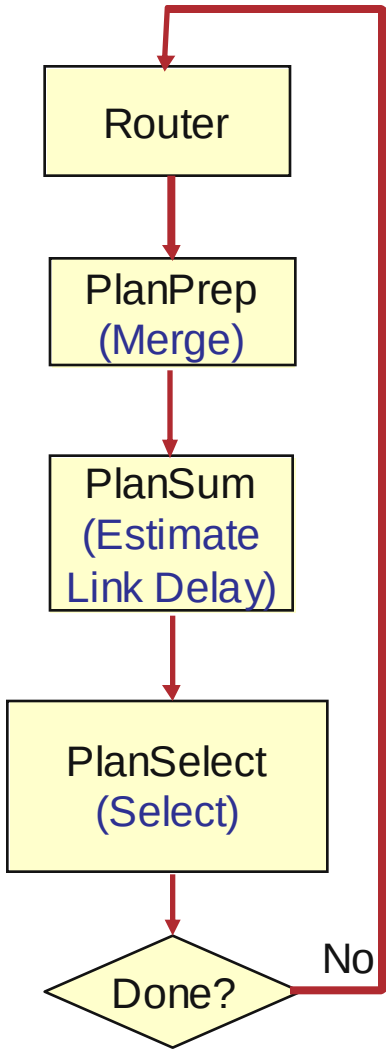

- PlanSelect Control Keys
  - Random re-routes
    - SELECTION_PERCENTAGE: <= 10%
  - *VC Ratio stabilization*
    - SELECT_VC_RATIO: >= 1.5
    - SELECTION_PERCENTAGE: >= 50%
    - MAXIMUM_PERCENT_SELECTED: <= 10%
  - *Plan Time stabilization*
    - PERCENT_TIME_DIFFERENCE: >= 10%
    - MINIMUM_TIME_DIFFERENCE: ~2 minutes
    - MAXIMUM_TIME_DIFFERENCE: 30+ minutes
    - SELECTION_PERCENTAGE: >= 50% or more
    - MAXIMUM_PERCENT_SELECTED: <= 10%

Router Stabilization Batch Script

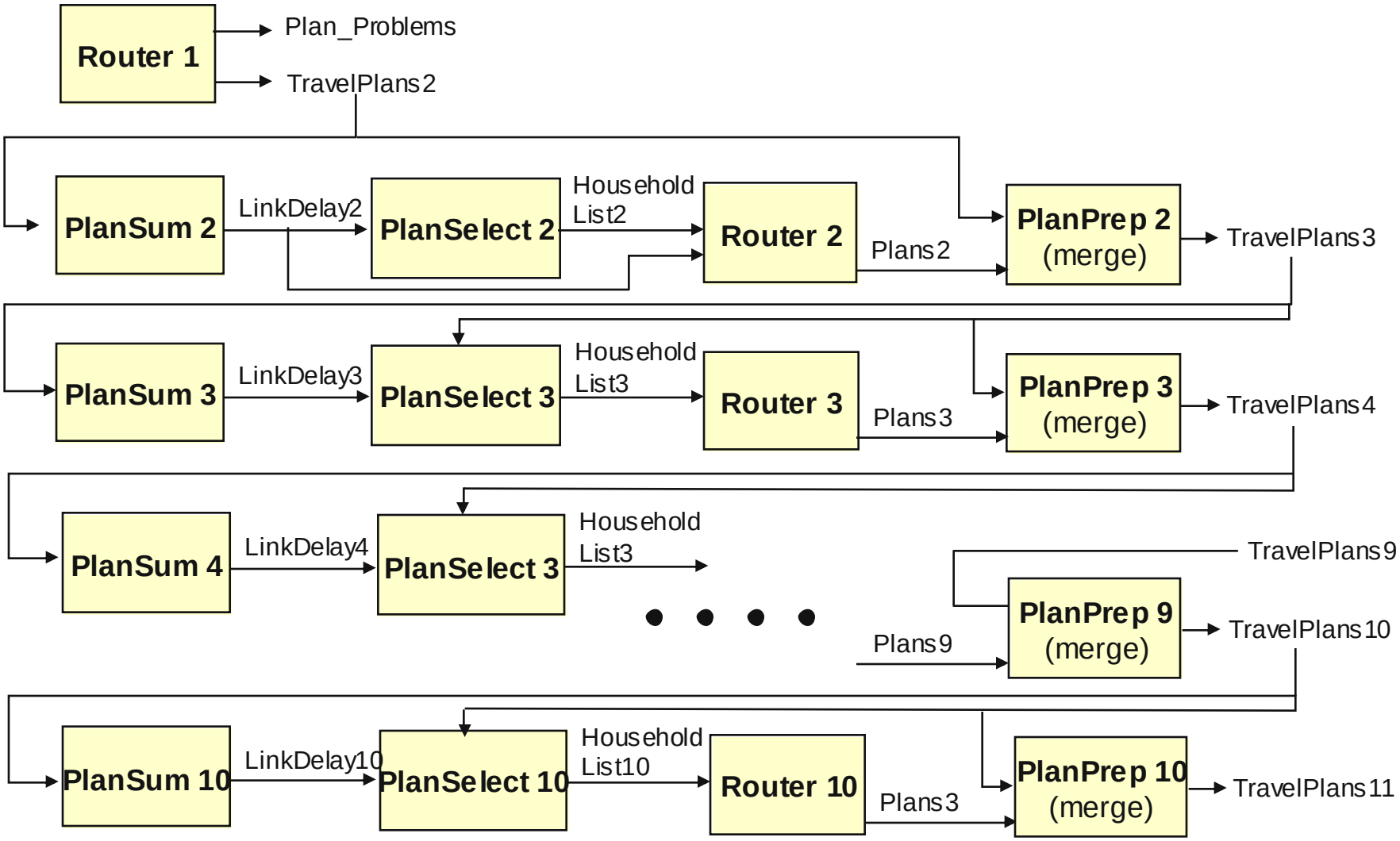

Router Stabilization (continued)

- Refine Travel Plans to logically distribute traffic prior to Microsimulation

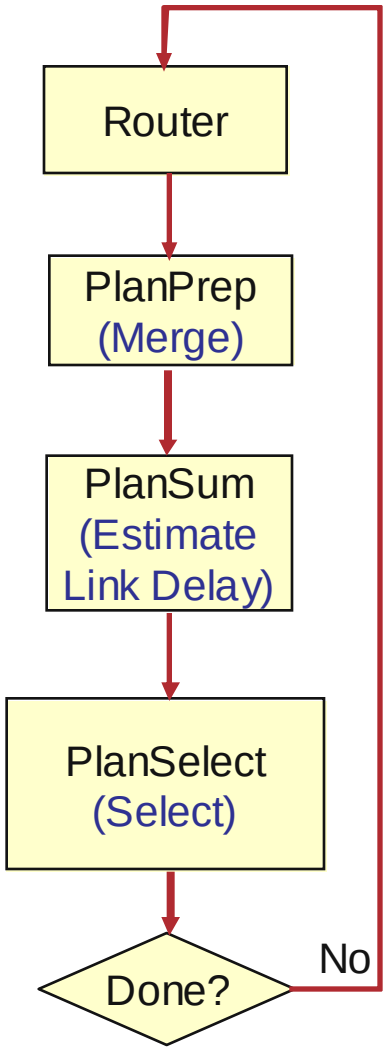

Table 1. Selection Criteria for Router Stabilization

Variables	Iterations		
	2-4	5-10	11-15
Select_VC_Ratios	2.0	1.5	-
Percent Time Difference	-	-	10
Minimum Time Difference	-	-	2
Maximum Time Difference			45
Selection_percentage	50	50	50
Maximum_percent_selected	10	10	10
Select_time_periods	all	all	all

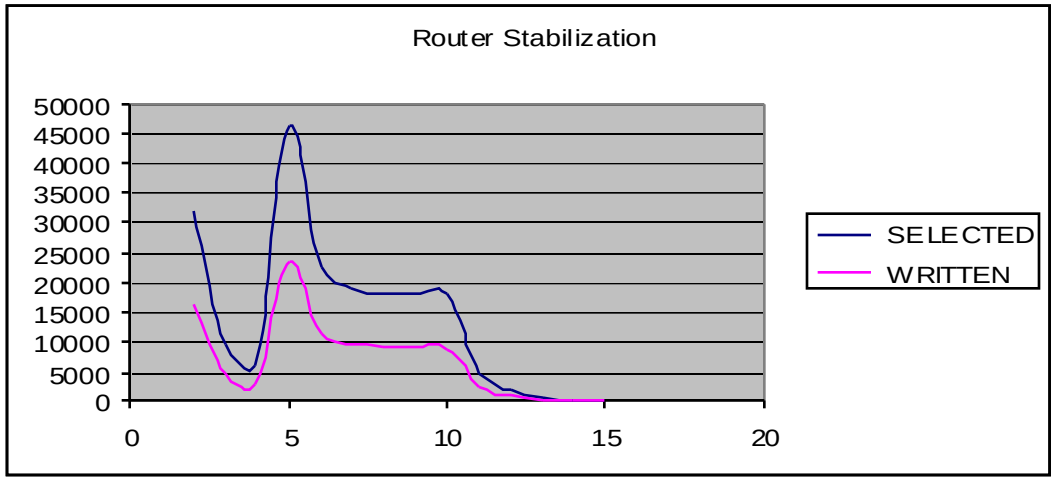

Router Feedback Oscillations

- The graphs on the right show 5 cases that ran through 50 iterations between Router and PlanSum (no microsimulation)
- PlanSelect has been instructed to select trips based volume/capacity ratios
  - Trips get selected if they go through a link at a time when the V/C ratio is greater than 1.3
  - Of 28 million trips, about 8 million get selected initially
  - Rerouting subsets of 2, 4, 6, 8, and 10 % in each iteration leads to the results shown on the right

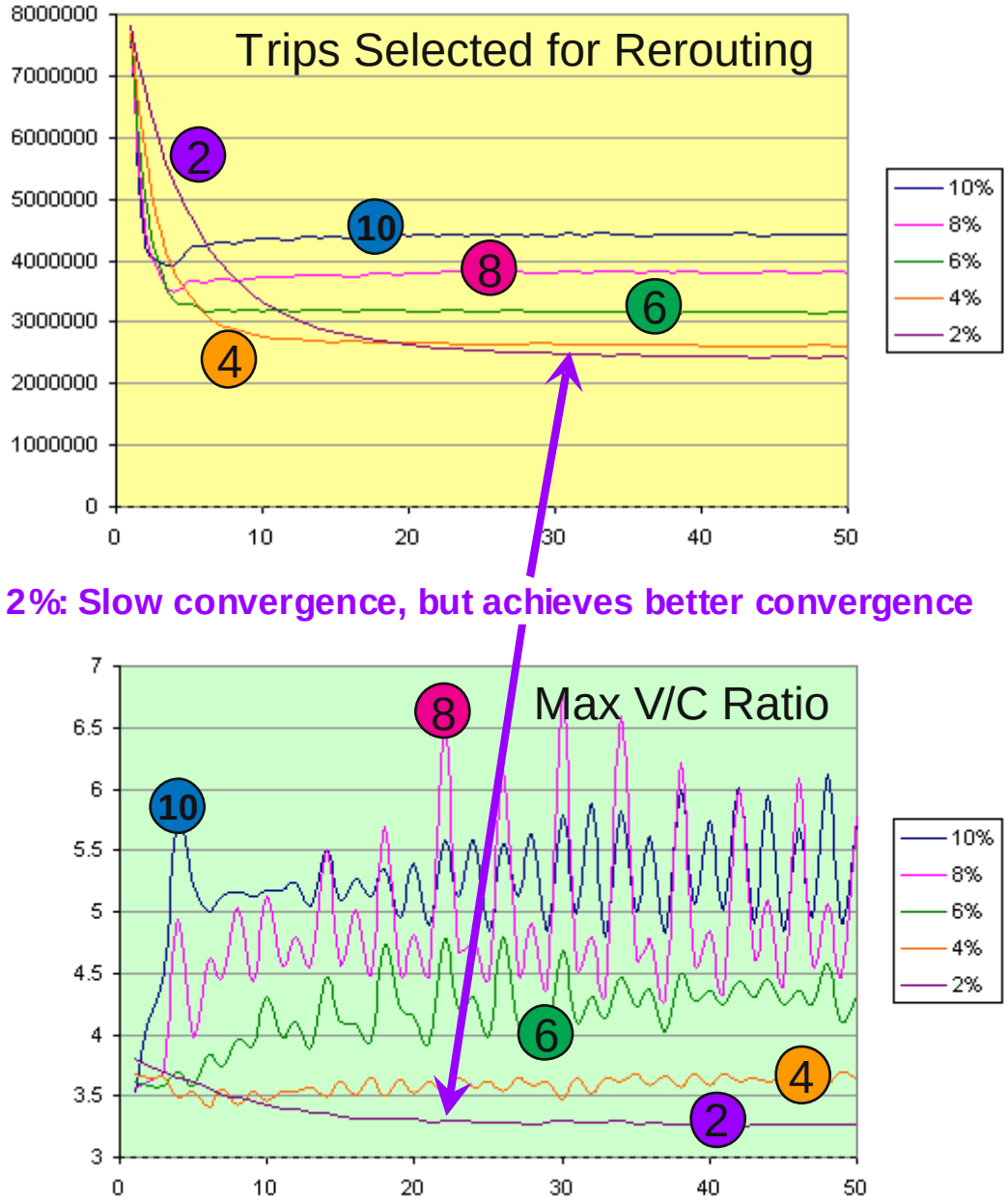

Microsimulator Stabilization

- Purpose
  - Debug further network problems
  - Address simulation problems

- Microsimulator

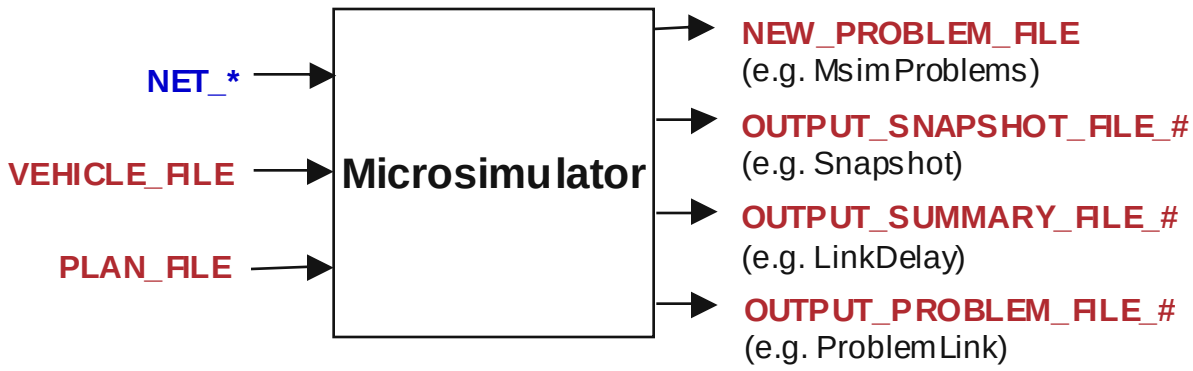

- ArcGIS

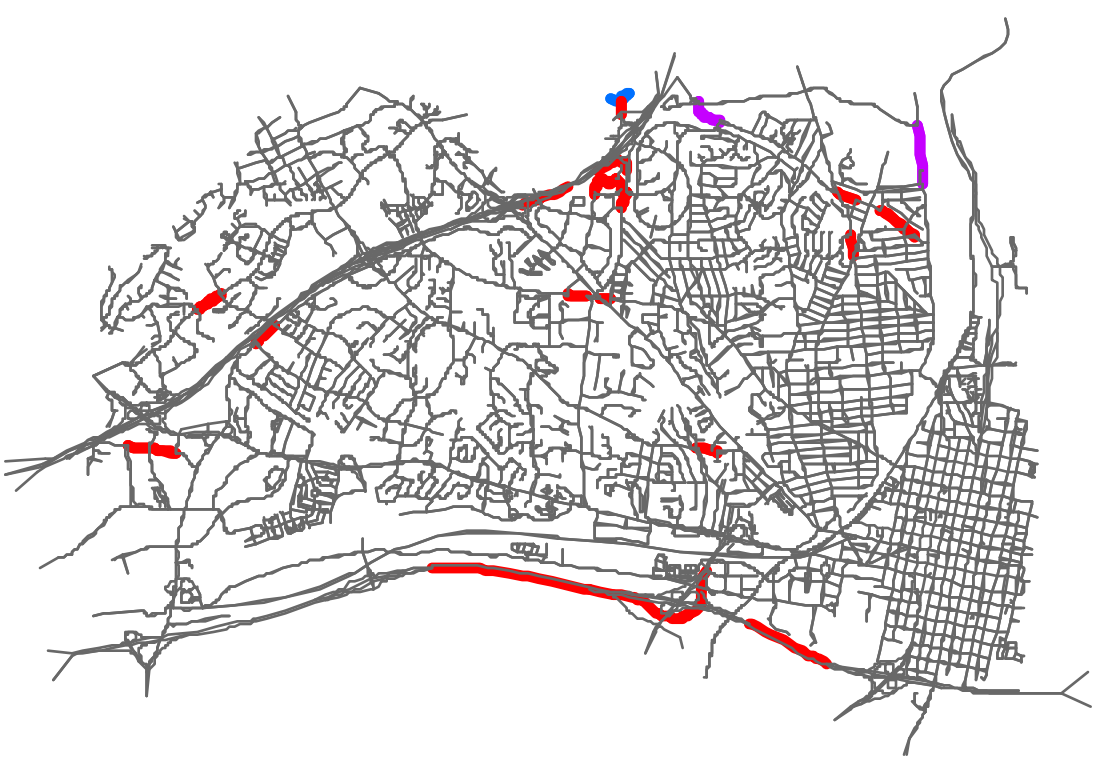

Network Cleaning

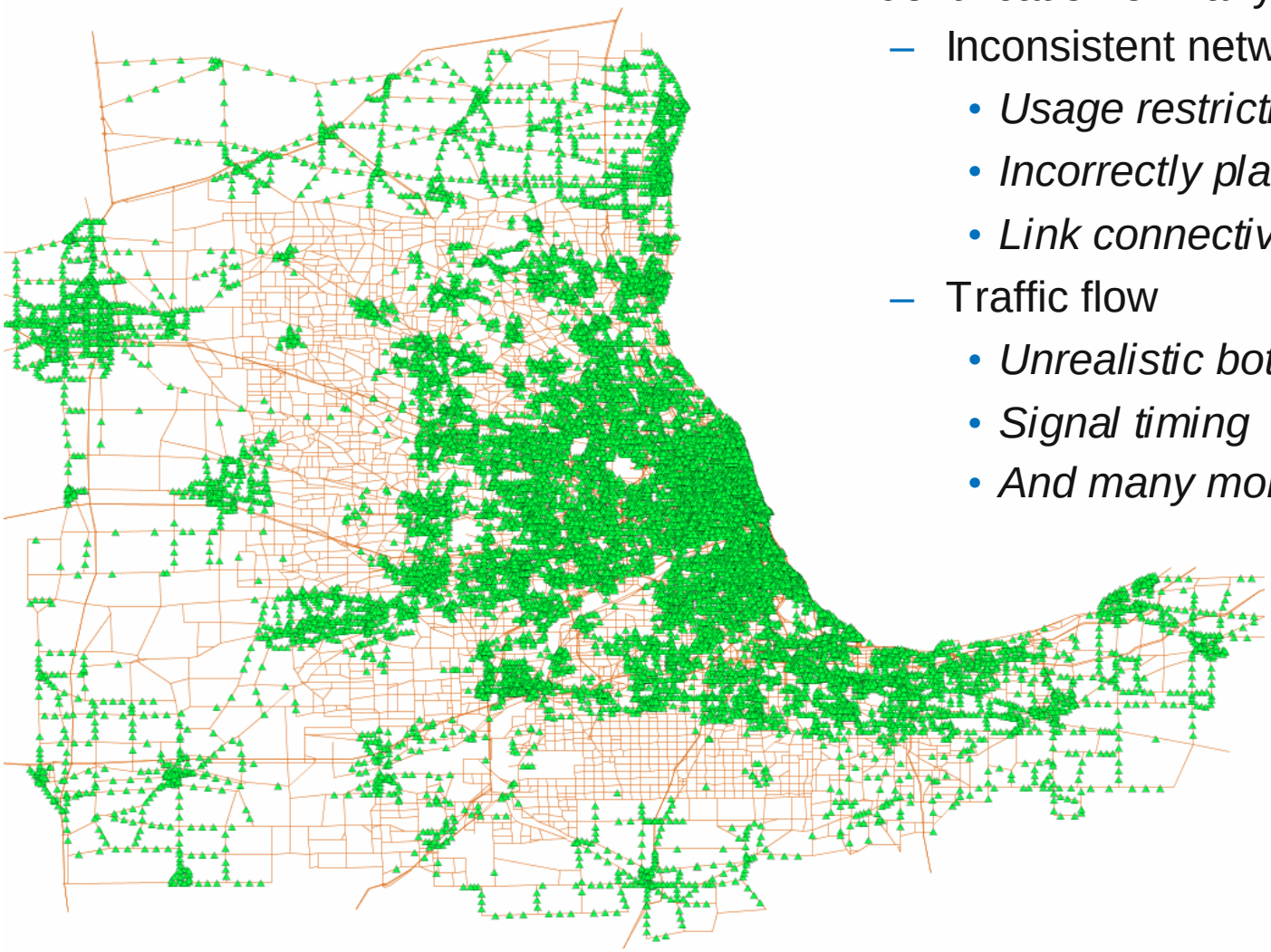

- Plotting of problems from both the router and the microsimulator allows for the identification of many problems, such as
  - Inconsistent network coding
    - *Usage restrictions*
    - *Incorrectly placed signals*
    - *Link connectivity*
  - Traffic flow
    - *Unrealistic bottlenecks*
    - *Signal timing*
    - *And many more …*

ArcGIS visualization is part of a separate training session

- ProblemSelect: Travelers with specified problem types
  - Network Connectivity
  - Parking Access:
    - *Bigger ellipse or ENFORCE_PARKING_LANES*
  - Wait time, Departure time, Arrival Time

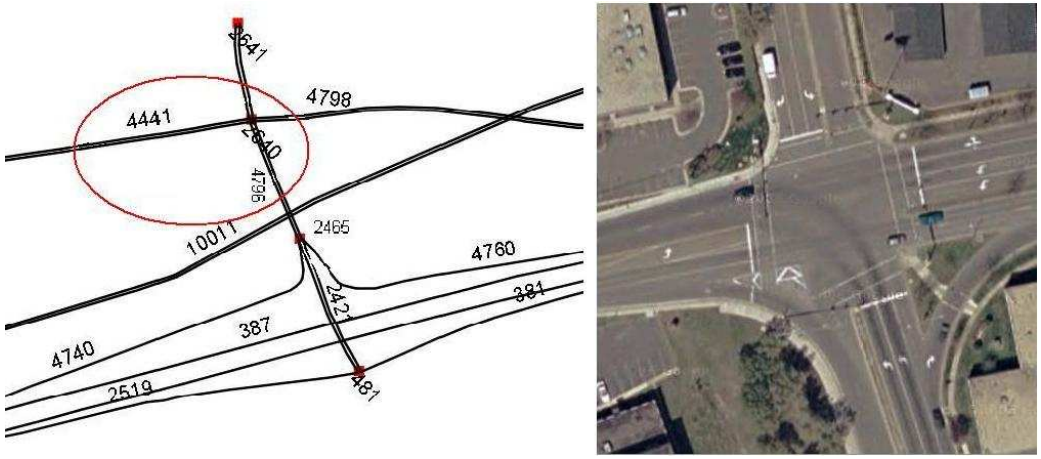

Network Connectivity Problem

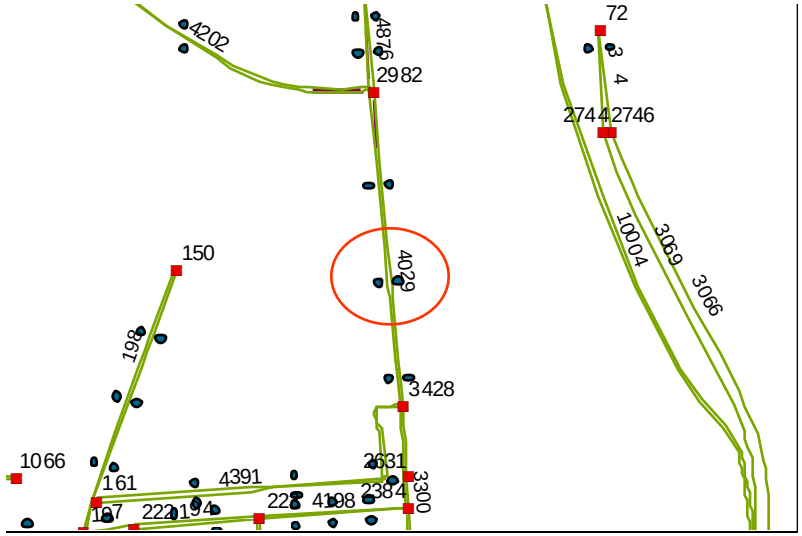

Parking Access Problems

Microsimulator Stabilization (continued)

- PlanSelect
  - Targeted re-routes
    - *Congested time periods*
    - *Geographic areas / OD patterns*
    - *Network coding changes / problems*
  - Plan Time Stabilization
    - *Re-route travelers whose trip duration in the Plan file is significantly different from the travel time calculated from the path*

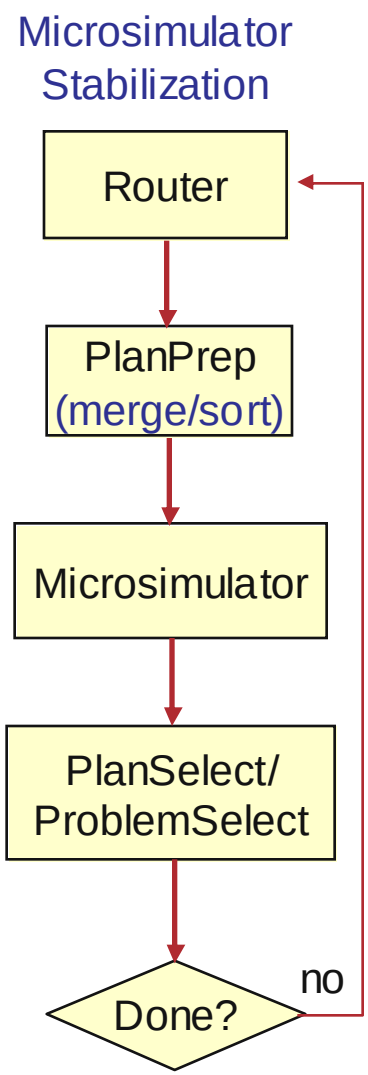

- Targeted Feedback (PlanSelect)
  - Congested time periods
    - *SELECT_TIME_PERIODS (e.g. 6:00..10:00)*
  - Geographic areas / OD patterns
    - *SELECT_COORDINATES (e.g., x1, y1, x2, y2)*
    - *SELECT_OD_COORDINATES*
    - *EXCLUDE_OD_COORDINATES*
  - Network coding changes / problems
    - *SELECT_NODES_x (e.g., 100, 200, 300)*
    - *SELECT_PARKING_LOTS*
    - *SELECT_TRANSIT_STOPS*

Identification of Convergence Problems

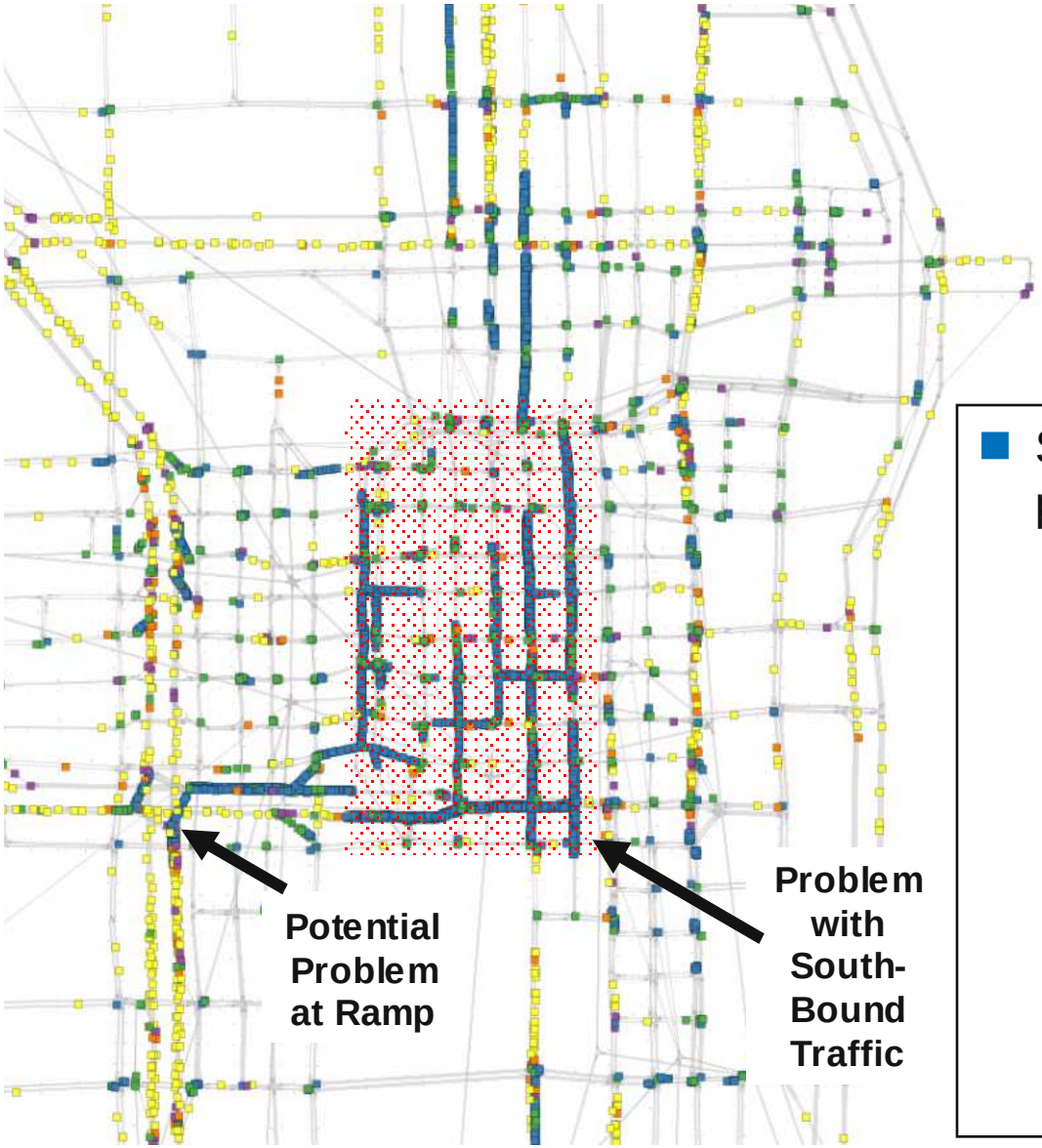

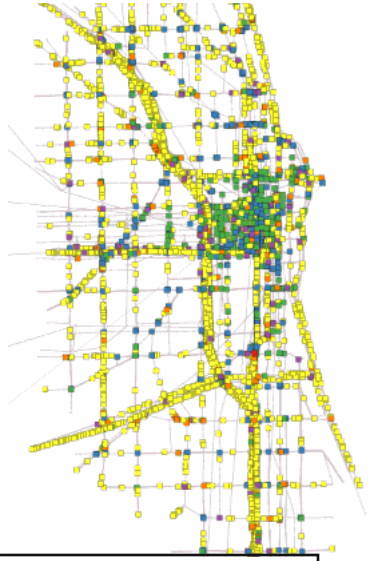

- Several tools exist to identify problems visually and numerically
  - LinkSum, PlanSum, ArcDiff, ArcPlan, ArcProblem, ArcSnapshot, and more
  - ArcSnapshot output is shown on the right, vehicles are color-coded by speed
  - Video sequences can help identifying problems at intersection, especially with traffic signals

- LinkSum
  - Generates various statistics files for us to analyze traffic conditions

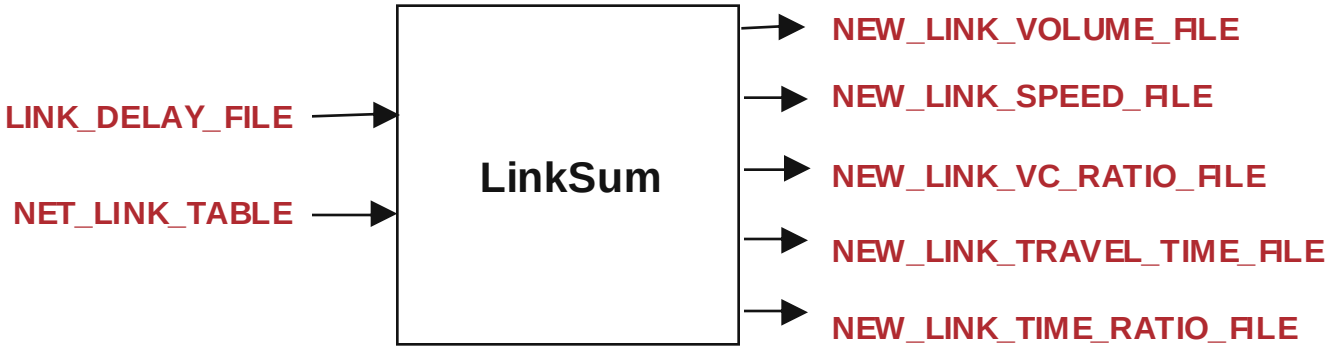

Microsimulator Stabilization Batch Script

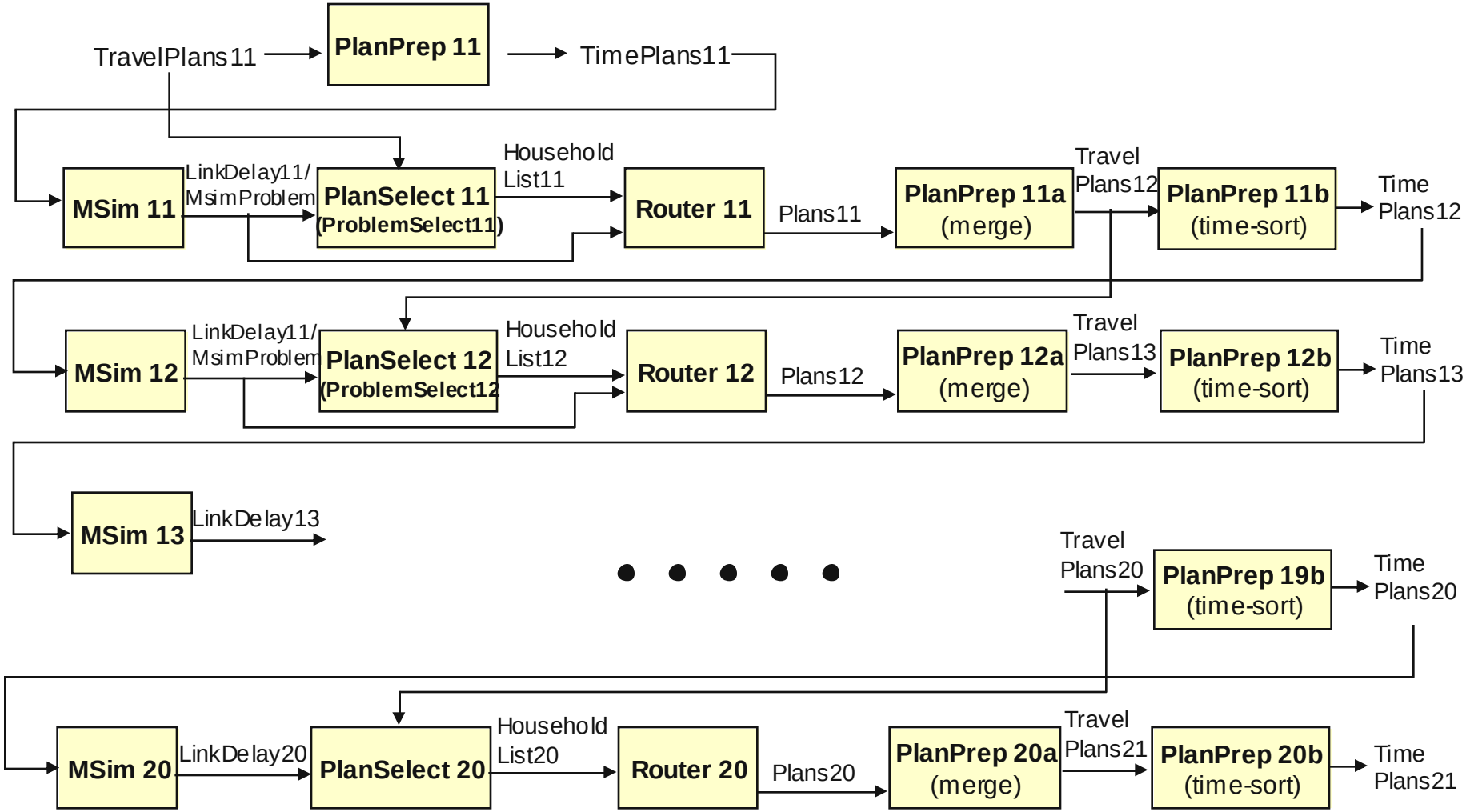

Microsimulator Stabilization (continued)

IT	ProblemSelectType	Selected = written	Msim Run time	Msim Total Probs
16	WAIT_TIME	8796	6:10AM	9958
17	WAIT_TIME	9732	6:10AM	8468
18	WAIT_TIME, ARRIVAL_TIME, DEPARTURE_TIME	4809	6:10AM	5128
19	WAIT_TIME, ARRIVAL_TIME, DEPARTURE_TIME	4915	6:10AM	4915
20	WAIT_TIME, ARRIVAL_TIME	4704	6:10AM	996
21	WAIT_TIME, ARRIVAL_TIME	827	6:10AM	530
22	WAIT_TIME, ARRIVAL_TIME	370	6:10AM	462
23	WAIT_TIME, ARRIVAL_TIME	71669	6:10AM	70836
24	All	62653	Whole Day	44287
25	ARRIVAL_TIME	37404	Whole Day	32237
26	ARRIVAL_TIME	28920	Whole Day	25744
27	ARRIVAL_TIME	22537	Whole Day	14391
28	ARRIVAL_TIME	12499	Whole Day	595
29	ARRIVAL_TIME	287	Whole Day	362
30	WAIT_TIME, VEHICLE_SPACING	287	Whole Day	362

Now, PlanSelect Iterations - all done for the whole day

IT	VCRATIO	SELPCT	MAXPCT	TOTAL	SELECTED	WRITTEN	TOTAL_PROBS
31	1	50	10	294362	34645	17424	13609
32	1	50	10	294362	25238	12655	3049
33	1	50	10	294362	26713	13405	14534
34	1	50	10	294362	21086	10598	18872
35	1	50	10	294362	21487	10804	354

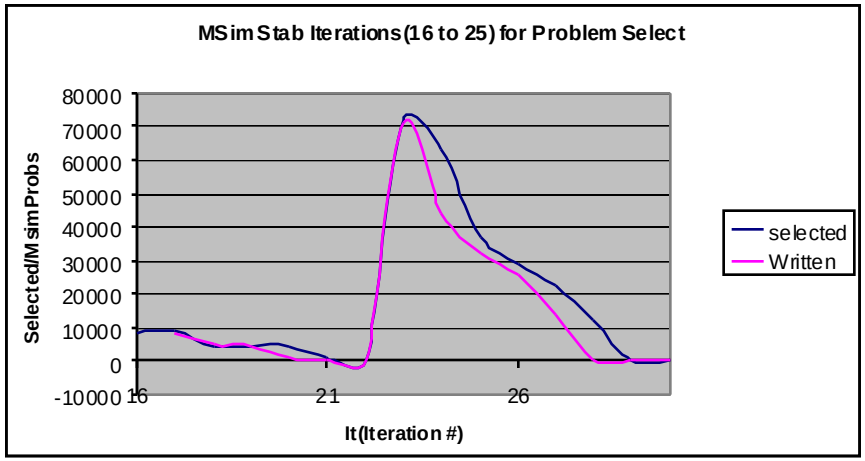

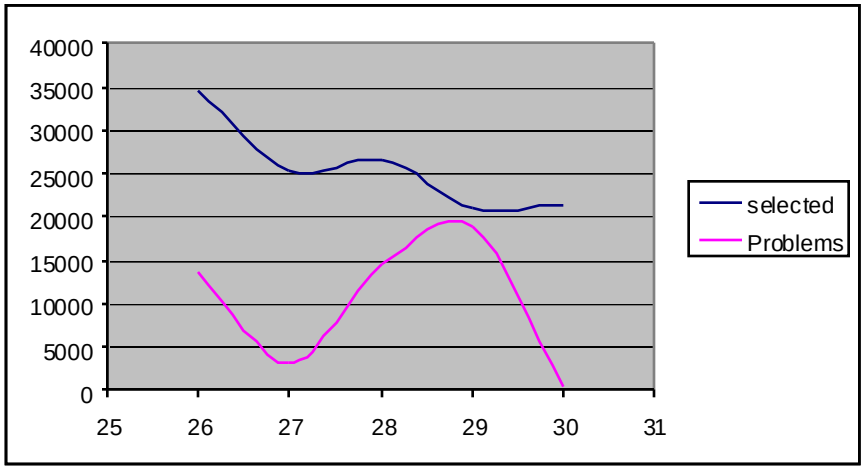

User Equilibration

- User Equilibrium:
  - A condition where no traveler can reduce their trip travel time by changing paths
- TRANSIMS approximation procedure
  - Use Microsimulator Link Delay to re-route all travelers and compare the trip duration to the trip duration stored in the simulated Plan file
  - Replace significantly different plans and resimulate
  - User Equilibrium =<2.0% travelers selected

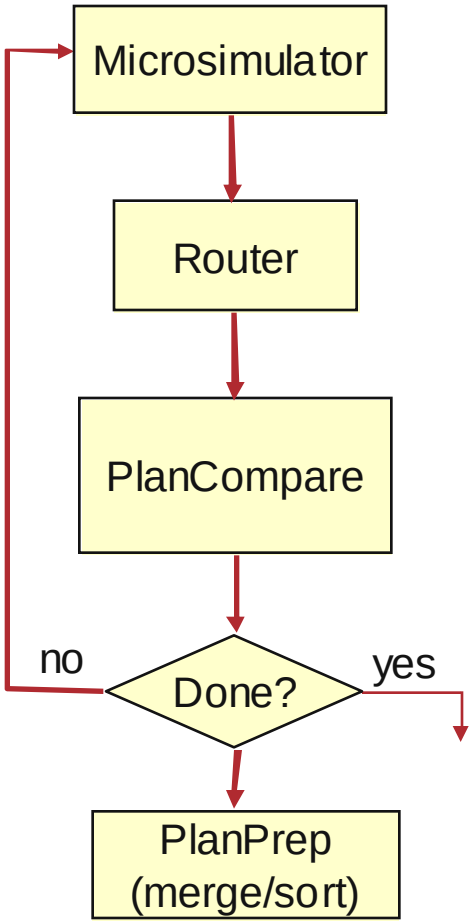

Microsimulator Equilibration Batch Script

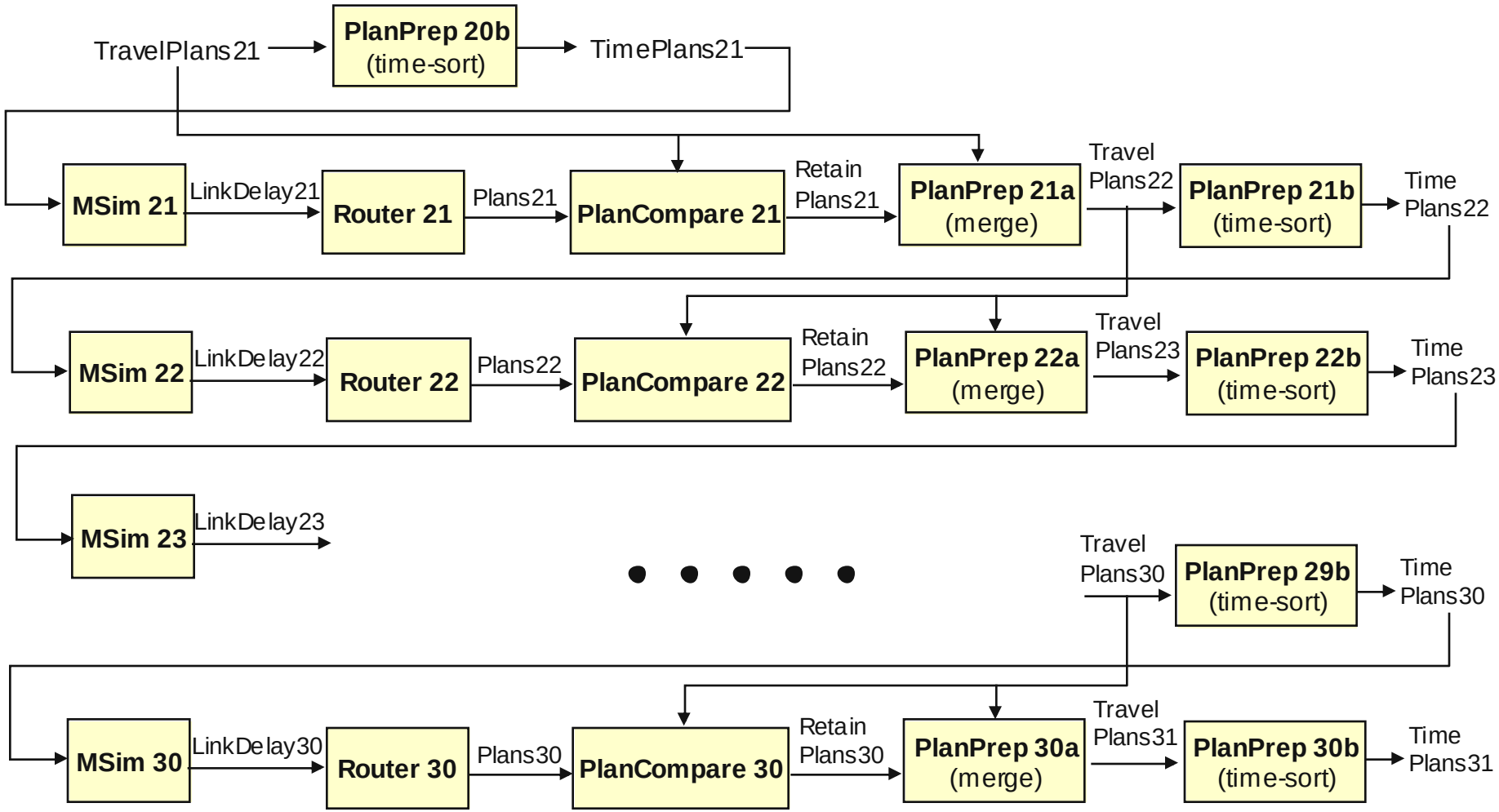

Credits and Acknowledgements

- Parts of this training materials were based on AECOM training (Traffic Assignment, June 28, 2007)
- GIS visualization materials were mostly developed at Argonne based on the TRANSIMS tools developed by AECOM for USDOT
- Chicago road and transit network data used in some of the examples was provided by the Chicago Metropolitan Agency for Planning
- USDOT provided the funding for the development of these training materials
- USDOT provided the funding for the TRACC computing center and the resources necessary to perform these training session